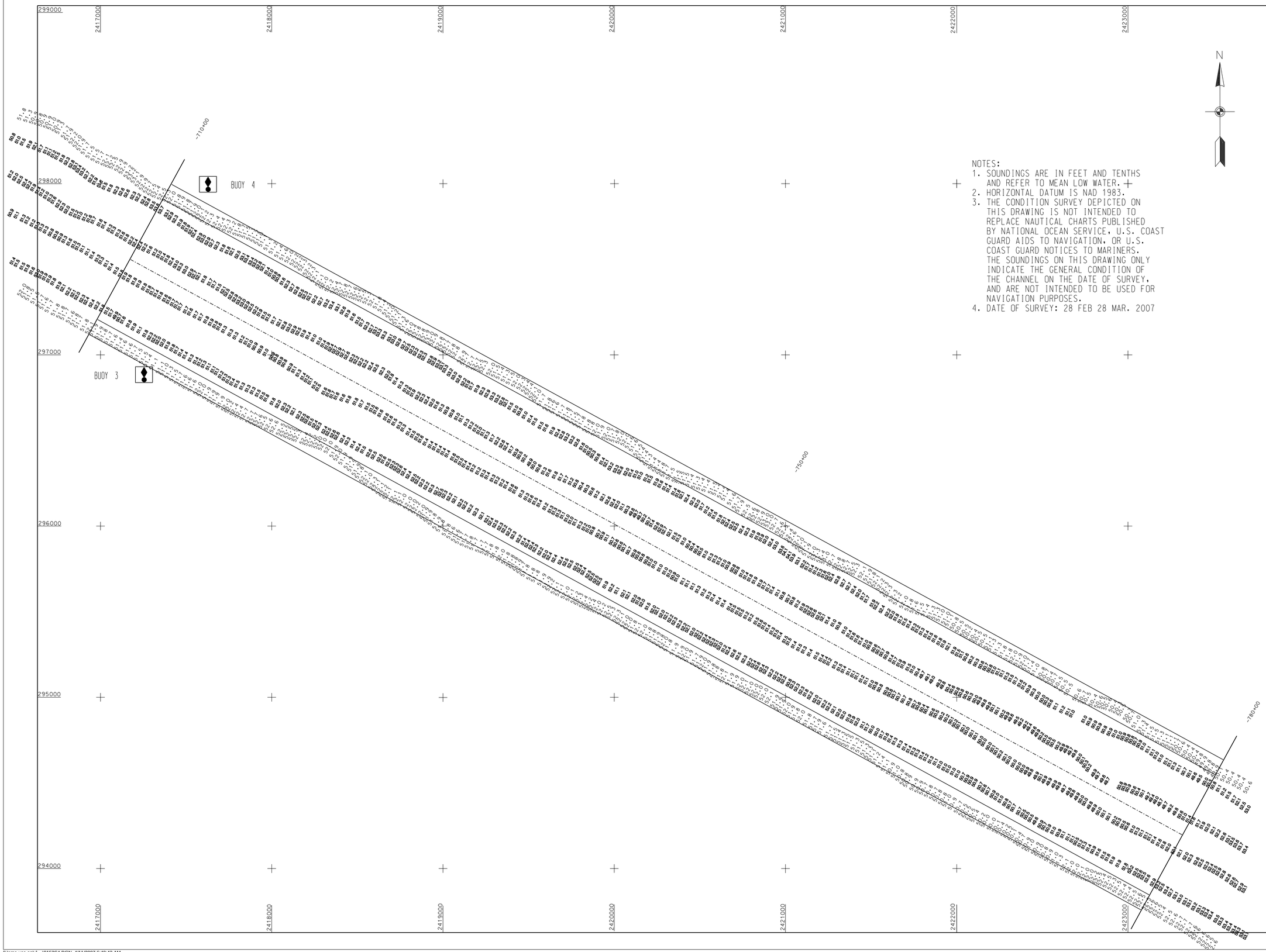

NOTES:
1. SOUNDINGS ARE IN FEET AND TENTHS AND REFER TO MEAN LOW WATER.
2. HORIZONTAL DATUM IS NAD 1983.
3. THE CONDITION SURVEY DEPICTED ON THIS DRAWING IS NOT INTENDED TO REPLACE NAUTICAL CHARTS PUBLISHED BY NATIONAL OCEAN SERVICE, U.S. COAST GUARD AIDS TO NAVIGATION, OR U.S. COAST GUARD NOTICES TO MARINERS. THE SOUNDINGS ON THIS DRAWING ONLY INDICATE THE GENERAL CONDITION OF THE CHANNEL ON THE DATE OF SURVEY, AND ARE NOT INTENDED TO BE USED FOR NAVIGATION PURPOSES.
4. DATE OF SURVEY: 28 FEB 28 MAR. 2007

US Army Corps of Engineers
Charleston District

MARK	DESCRIPTION	DATE	APPR.	MARK	DESCRIPTION	DATE	APPR.

Date: APR. 07
Rev:
Dwgs. file no: 9152
Drawing Code:
File name:
Plot date:
Dwg. scale: 1" = 200'

Designed by:
Drawn by: MRV
Checked by:
Reviewed by:
Submitted by:

U.S. ARMY ENGINEER DISTRICT
CORPS OF ENGINEERS
CHARLESTON, SOUTH CAROLINA

CHARLESTON HARBOR
CHARLESTON ENTRANCE CHANNEL
9152
CHARLESTON COUNTY SOUTH CAROLINA

SHEET REFERENCE NUMBER
CV–SP0001

SHEET 4 OF 16

[Home use only] ...\9152S4.DGN 4/11/2007 6:40:43 AM