JOINT
PUBLIC NOTICE

CHARLESTON DISTRICT, CORPS OF ENGINEERS
69A Hagood Avenue
Charleston, South Carolina 29403-5107
and
THE S.C. DEPARTMENT OF HEALTH AND ENVIRONMENTAL CONTROL
Office of Ocean and Coastal Resource Management
1362 McMillan Avenue, Suite 400
Charleston, South Carolina 29405

REGULATORY DIVISION July 22, 2005
Refer to: P/N # 2005-2W-184-P

Pursuant to Section 10 of the Rivers and Harbors Act of 1899 (33 U.S.C. 403), and the South Carolina Coastal Zone Management Act (48-39-10 et.seq.) an application has been submitted to the Department of the Army and the South Carolina Department of Health and Environmental Control by

NANCY & JOE MARKOVICH
C/O DOCK PERMITTING LIMITED
PO BOX 12880
CHARLESTON, SOUTH CAROLINA 29412

for a permit to construct a walkway, pier, floating dock and boatlift in a

tributary of James Island Creek

at and adjacent to 1275 Harbor View Road, James Island, Charleston County, South Carolina
(Latitude: 32.75204°, Longitude: -79.95426°)

In order to give all interested parties an opportunity to express their views

NOTICE

is hereby given that written statements regarding the proposed work will be received by both of the above mentioned offices until

12 O'CLOCK NOON, MONDAY, 22 AUGUST 2005

from those interested in the activity and whose interests may be affected by the proposed work.

The proposed work consists of constructing a private walkway and dock. A 4' x 716' walkway with handrails will lead to a 12' x 12' covered pierhead with handrails. A 3' x 16' aluminum gangway will lead to an 8' x 15' floating dock that will be constructed on the north side of the pierhead, with a 4-pile boatlift constructed to the south of the pierhead. The purpose of this work is for the applicant's private recreational use.

NOTE: Plans depicting the work described in this notice are available and will be provided, upon receipt of a written request, to anyone that is interested in obtaining a copy of the plans for the specific project. The request must identify the project of interest by public notice number and a self-addressed stamped envelope must also be provided for mailing the drawings to you. Your request for drawings should be addressed to the

REGULATORY DIVISION
Refer to: P/N #2005-2W-184-P

22 July 2005

U.S. Army Corps of Engineers
ATTN: REGULATORY DIVISION
69A Hagood Avenue
Charleston, South Carolina 29403-5107

The work shown on this application must also be certified as consistent with applicable provisions of the Coastal Zone Management Program (15 CFR 930). The District Engineer will not process this application to a conclusion until such certification is received. The applicant is hereby advised that supplemental information may be required by the State to facilitate the review. Persons wishing to comment or object to State certification must submit all comments in writing to the South Carolina Department of Health and Environmental Control at the above address within thirty (30) days of the date of this notice.

This initiates the Essential Fish Habitat (EFH) consultation requirements of the Magnuson-Stevens Fishery Conservation and Management Act. Implementation of the proposed project would impact estuarine substrates and emergent wetlands utilized by various life stages of species comprising the red drum, shrimp, and snapper-grouper management complexes. Our initial determination is that the proposed action would not have a substantial individual or cumulative adverse impact on EFH or fisheries managed by the South Atlantic Fishery Management Council and the National Marine Fisheries Service (NMFS). Our final determination relative to project impacts and the need for mitigation measures is subject to review by and coordination with the NMFS.

The District Engineer has consulted the most recently available information and has determined that the project is likely to adversely affect the wood stork (*Mycteria americana*) which has a roosting area less than 500 feet from the proposed project location. This public notice serves as a request to the U.S. Fish and Wildlife Service to initiate formal consultation on this species, pursuant to Section 7(c) of the Endangered Species Act of 1973 (as amended). A biological assessment (or other similar document) detailing our analysis of the effects of the action will be provided.

The District Engineer has consulted the latest published version of the National Register of Historic Places for the presence or absence of registered properties, or properties listed as being eligible for inclusion therein, and this worksite is not included as a registered property or property listed as being eligible for inclusion in the Register. Consultation of the National Register constitutes the extent of cultural resource investigations by the District Engineer, and he is otherwise unaware of the presence of such resources. Presently unknown archaeological, scientific, prehistorical, or historical data may be lost or destroyed by the work to be accomplished under the requested permit.

Any person may request, in writing, within the comment period specified in this notice, that a public hearing be held to consider this application. Requests for a public hearing shall state, with particularity, the reasons for holding a public hearing.

The decision whether to issue a permit will be based on an evaluation of the probable impact including cumulative impacts of the activity on the public interest. That decision will reflect the national concern for both protection and utilization of important resources. The benefit which reasonably may be expected to accrue from the project must be balanced against its reasonably foreseeable detriments. All factors which may be relevant to the project will be considered including the cumulative effects thereof; among those are conservation, economics, aesthetics, general environmental concerns, wetlands, historic properties, fish and wildlife values, flood hazards, flood plain values, land use, navigation, shoreline erosion and accretion, recreation, water supply and conservation, water quality, energy needs, safety, food and fiber production and, in general, the needs and welfare of the people. A permit will be granted unless the District Engineer determines that it would be contrary to the public interest. In cases of conflicting property rights, the Corps of Engineers cannot undertake to adjudicate rival claims.

REGULATORY DIVISION
Refer to: P/N# 2005-2W-184-P

22 July 2005

The Corps of Engineers is soliciting comments from the public; Federal, state, and local agencies and officials; Indian Tribes; and other interested parties in order to consider and evaluate the impacts of this activity. Any comments received will be considered by the Corps of Engineers to determine whether to issue, modify, condition or deny a permit for this project. To make this decision, comments are used to assess impacts on endangered species, historic properties, water quality, general environmental effects, and the other public interest factors listed above. Comments are used in the preparation of an Environmental Assessment and/or an Environmental Impact Statement pursuant to the National Environmental Policy Act. Comments are also used to determine the need for a public hearing and to determine the overall public interest of the activity.

If there are any questions concerning this public notice, please contact me at 843-329-8044 or toll free at 1-866-329-8187.

Robin Coller-Socha
Project Manager
Regulatory Division
U.S. Army Corps of Engineers

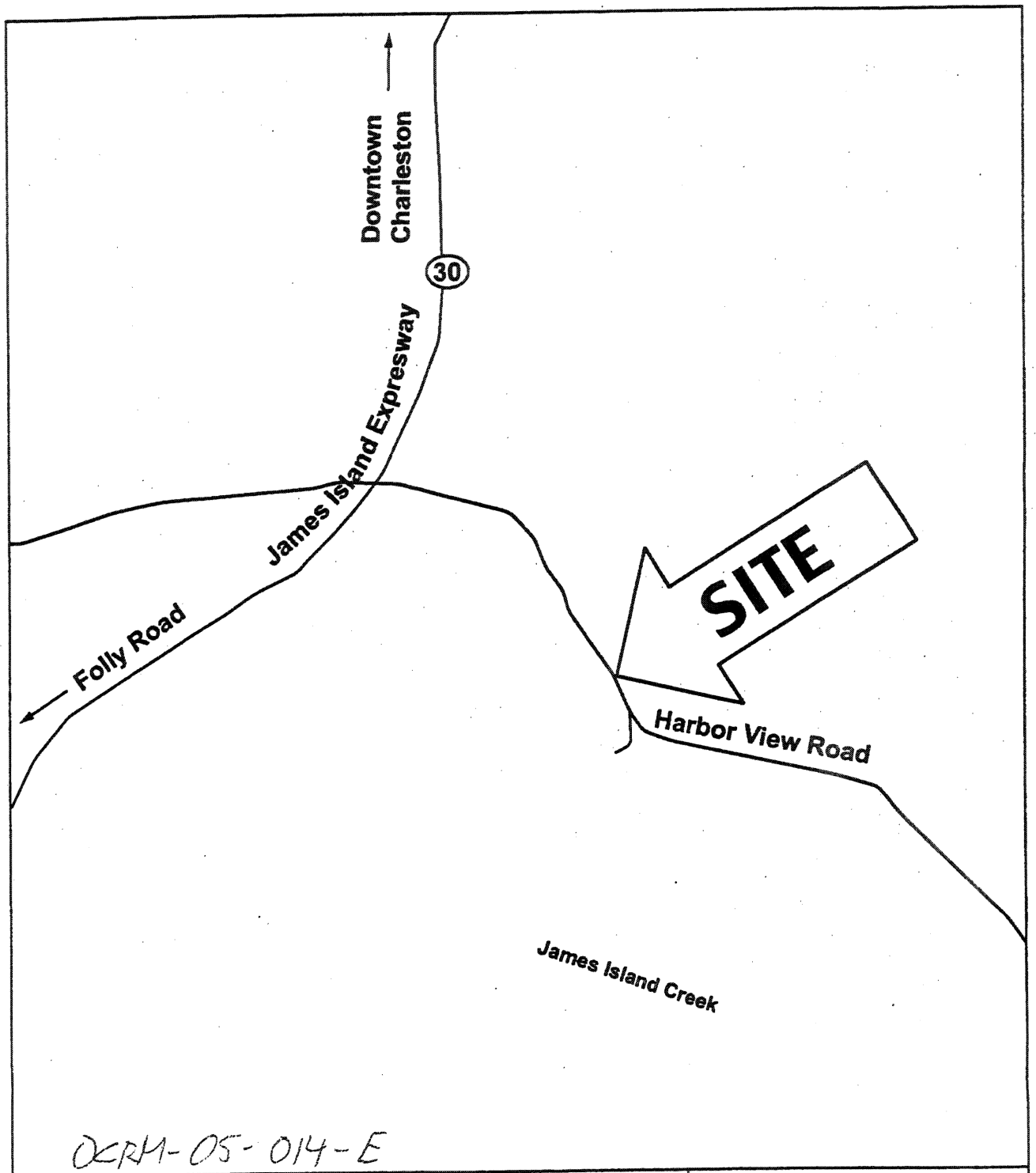

OCRM-05-014-E

PROPOSED: PRIVATE DOCK CONSTRUCTION ADJACENT PROPERTY OWNERS 1. Bud Sutherland 2. Peggy Breitmayer	**FIGURE 1** SITE LOCATION MAP NOT TO SCALE NANCY & JOE MARKOVICH 5 TABBY LANE ISLE OF PALMS, SC 29451	**PROPOSED:** PRIVATE DOCK CONSTRUCTION **IN:** UN-NAMED TRIBUTARY **NEAR:** JAMES ISLAND CREEK **COUNTY OF:** CHARLESTON, SC **APPLICATION BY:** NANCY & JOE MARKOVICH **P/N#:** TBD **DATE:** DECEMBER 23, 2004

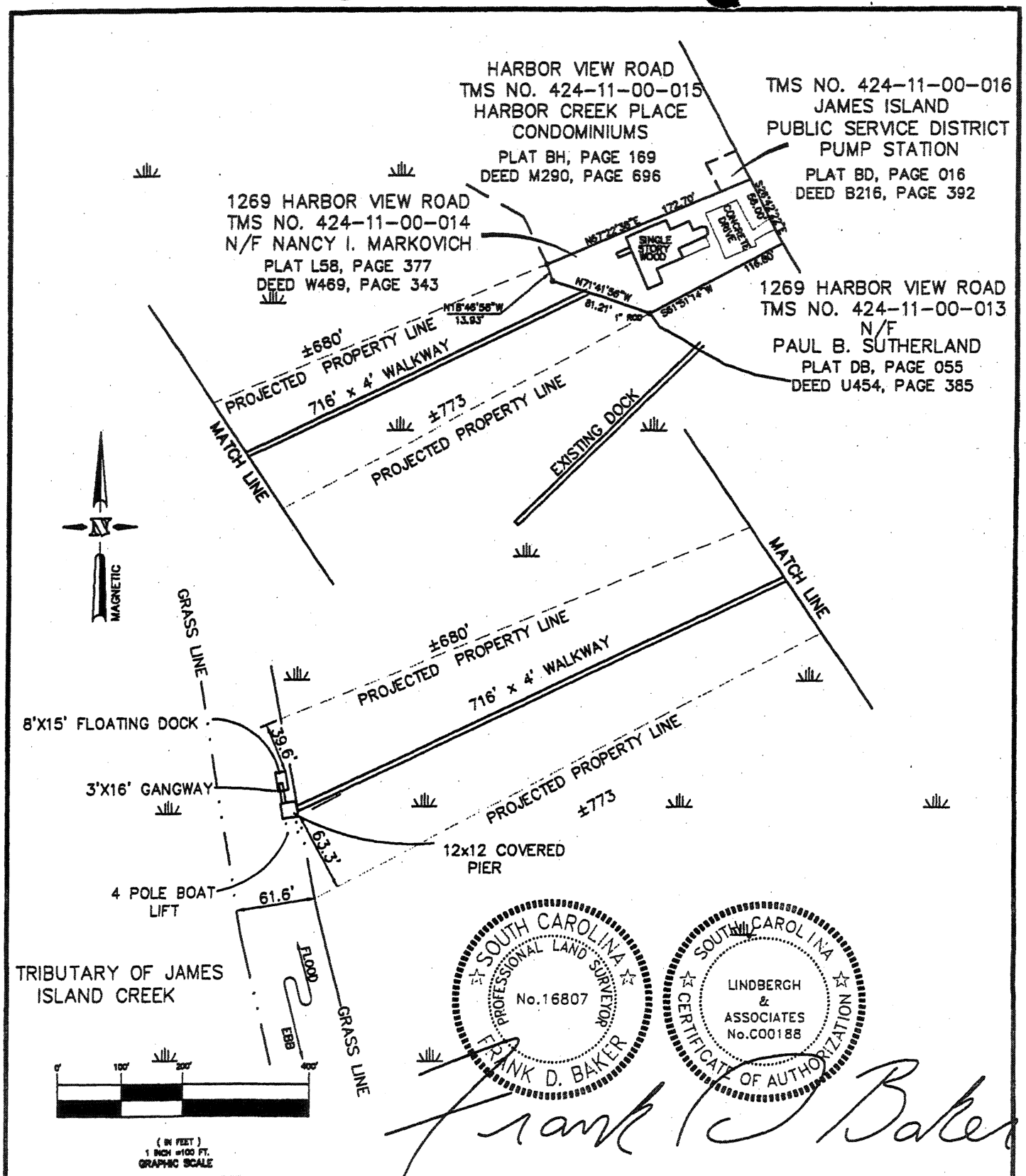

APPLICANT: MS. NANCY I. MARKOVICH ACTIVITY: PRIVATE RECREATIONAL DOCK	LOCATION: 1275 HARBOR VIEW ROAD JAMES ISLAND COUNTY: CHARLESTON DATE 12-07-04	ADJACENT OWNERS PAUL B. SUTHERLAND HARBOR CREEK PLACE CONDOMINIUMS JAMES ISLAND PUBLIC SERVICE DISTRICT

OCRM-05-014-E

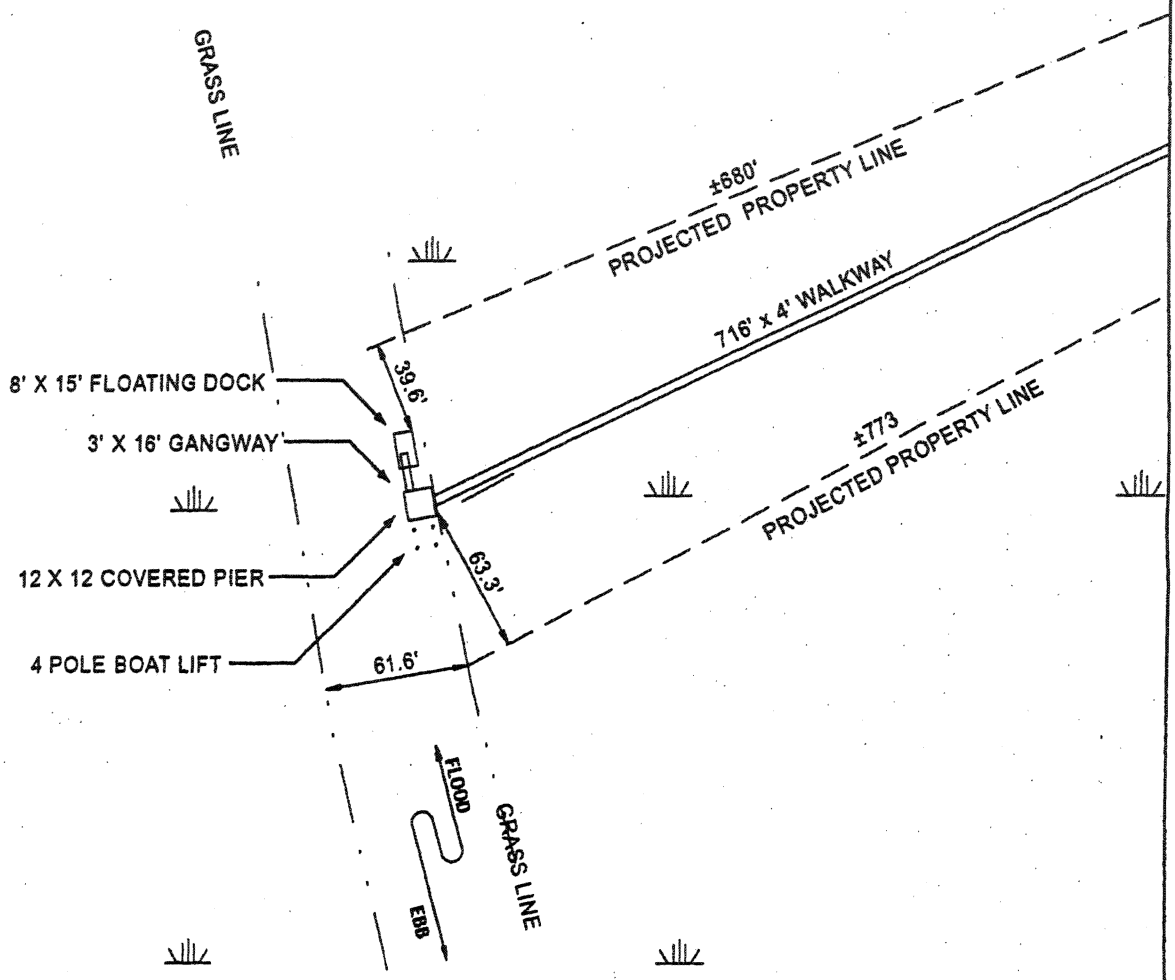

DOCK PLAN VIEW

NOT TO SCALE

* All Structured Represented Are Proposed Unless Specified.

OCRM-05-014-E

PROPOSED: PRIVATE DOCK CONSTRUCTION ADJACENT PROPERTY OWNERS 1. Bud Sutherland 2. Peggy Breitmayer	**FIGURE 2** DOCK PLAN VIEW **NOT TO SCALE** NANCY & JOE MARKOVICH 5 TABBY LANE ISLE OF PALMS, SC 29451	**PROPOSED:** PRIVATE DOCK CONSTRUCTION **IN:** UN-NAMED TRIBUTARY **NEAR:** JAMES ISLAND CREEK **COUNTY OF:** CHARLESTON, SC **APPLICATION BY:** NANCY & JOE MARKOVICH **P/N#:** TBD **DATE:** DECEMBER 23, 2004

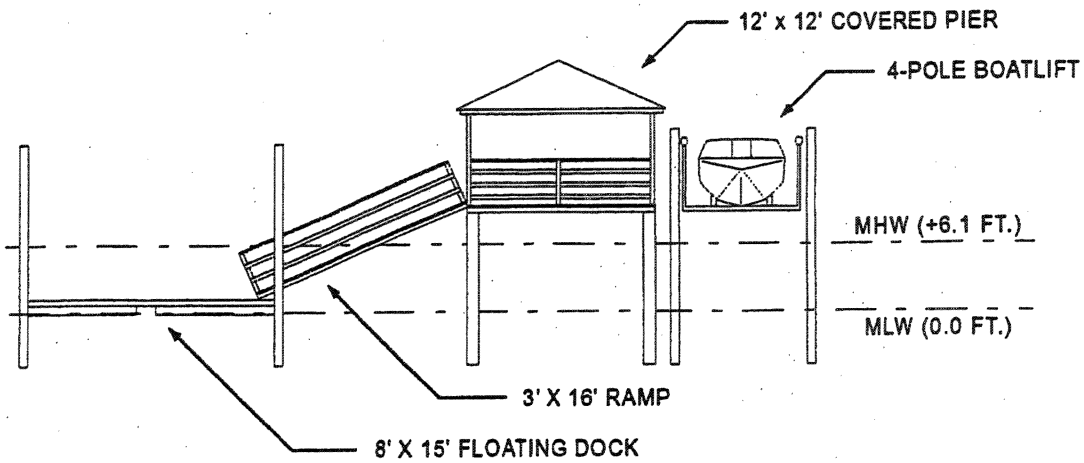

DOCK FRONT CROSS SECTION
NOT TO SCALE

LEGEND

MHW MEAN HIGH WATER
MLW MEAN LOW WATER

* All Structured Represented Are Proposed Unless Specified

OCRM-05-014-E

PROPOSED: PRIVATE DOCK CONSTRUCTION ADJACENT PROPERTY OWNERS 1. Bud Sutherland 2. Peggy Breitmayer	**FIGURE 4** DOCK FRONT CROSS SECTION NOT TO SCALE NANCY & JOE MARKOVICH 5 TABBY LANE ISLE OF PALMS, SC 29451	**PROPOSED:** PRIVATE DOCK CONSTRUCTION **IN:** UN-NAMED TRIBUTARY **NEAR:** JAMES ISLAND CREEK **COUNTY OF:** CHARLESTON, SC **APPLICATION BY:** NANCY & JOE MARKOVICH **P/N#:** TBD **DATE:** DECEMBER 23, 2004

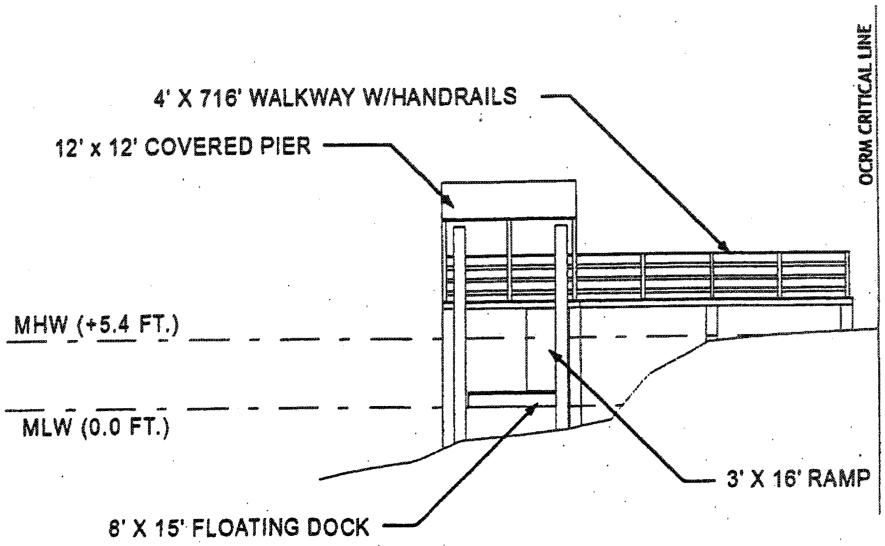

DOCK SIDE CROSS SECTION

NOT TO SCALE

LEGEND

MHW MEAN HIGH WATER
MLW MEAN LOW WATER

* All Structured Represented Are Proposed Unless Specified

OCRM-05-014-E

PROPOSED: PRIVATE DOCK CONSTRUCTION

ADJACENT PROPERTY OWNERS

1. Bud Sutherland
2. Peggy Breitmayer

FIGURE 3

DOCK SIDE CROSS SECTION

NOT TO SCALE

NANCY & JOE MARKOVICH
5 TABBY LANE
ISLE OF PALMS, SC 29451

PROPOSED: PRIVATE DOCK CONSTRUCTION
IN: UN-NAMED TRIBUTARY
NEAR: JAMES ISLAND CREEK
COUNTY OF: CHARLESTON, SC
APPLICATION BY: NANCY & JOE MARKOVICH
P/N#: TBD
DATE: DECEMBER 23, 2004