JOINT
PUBLIC NOTICE

CHARLESTON DISTRICT, CORPS OF ENGINEERS
69A Hagood Avenue
Charleston, South Carolina 29403-5107
and the
S.C. DEPARTMENT OF HEALTH AND ENVIRONMENTAL CONTROL
OFFICE OF OCEAN AND COASTAL RESOURCE MANAGEMENT
1362 McMillan Avenue, Suite 400
Charleston, South Carolina 29405

REGULATORY DIVISION
Refer to: P/N #2006-2327-2IX

OCTOBER 13, 2006

Pursuant to Section 10 of the Rivers and Harbors Act of 1899 (33 U.S.C. 403), Sections 401 and 404 of the Clean Water Act (33 U.S.C. 1344), and the South Carolina Coastal Zone Management Act (48-39-10 et.seq.) an application has been submitted to the Department of the Army and the S.C. Department of Health and Environmental Control by

YEAMANS HALL INC.
C/O FOLK LAND MANAGEMENT
3534 WHITE HALL ROAD
GREEN POND, SOUTH CAROLINA 29446

for a permit to create an impoundment by placing fill material in wetlands in order to enlarge an existing dike and install a rice trunk in an unnamed tributary of

GOOSE CREEK

adjacent to Yeamans Hall Drive in Yeamans Hall Club, Berkeley County, South Carolina (Latitude 32.92165, Longitude 79.98455

In order to give all interested parties an opportunity to express their views

NOTICE

is hereby given that written statements regarding the proposed work will be received by both of the above mentioned offices until

12 O'CLOCK NOON, MONDAY, NOVEMBER 13, 2006

from those interested in the activity and whose interests may be affected by the proposed work.

The proposed work consists of widening and re-topping an existing dike and installing a 4' wide X 1' deep X 28' long rice trunk in place of an existing pedestrian bridge. The dike improvement will include the placement of 166 cy (0.03 ac) of fill material in waters of the United States and excavating 166 cy (0.02 ac) in waters of the United States. Six littoral shelves will be constructed (170 cy, 0.05ac fill) from four holes to be excavated nearby. In summary the total fill in waters of the United States, to include wetlands, will be 336 cy (.08ac) and the total area excavated in waters of the United States will be 336cy (0.07ac). At full pool, the impoundment will flood 2.1 acres of waters of the United States, which includes wetlands. The purpose of the proposed work is to diversify the site to create and improve habitat for wildlife, waterfowl, and fisheries.

NOTE: Plans depicting the work described in this notice are available and will be provided, upon receipt of a written request, to anyone that is interested in obtaining a copy of the plans for the specific project. The request must identify the project of interest by public notice number and a self-addressed stamped envelope must also be provided for mailing the drawings to you. Your request for drawings should be addressed to the

U.S. Army Corps of Engineers
ATTN: REGULATORY DIVISION
69A Hagood Avenue
Charleston, South Carolina 29403-5107

The District Engineer has concluded that the discharges associated with this project, both direct and indirect, should be reviewed by the South Carolina Department of Health and Environmental Control in accordance with provisions of Section 401 of the Clean Water Act. As such, this notice constitutes a request, on behalf of the applicant, for certification that this project will comply with applicable effluent limitations and water quality standards. The work shown on this application must also be certified as consistent with applicable provisions the Coastal Zone Management Program (15 CFR 930). The District Engineer will not process this application to a conclusion until such certifications are received. The applicant is hereby advised that supplemental information may be required by the State to facilitate the review.

This notice initiates the Essential Fish Habitat (EFH) consultation requirements of the Magnuson-Stevens Fishery Conservation and Management Act. Implementation of the proposed project would impact approximately 2.2 acres of estuarine substrates and emergent wetlands utilized by various life stages of species comprising the red drum, shrimp, and snapper-grouper management complexes. Our initial determination is that the proposed action would not have a substantial individual or cumulative adverse impact on EFH or fisheries managed by the South Atlantic Fishery Management Council and the National Marine Fisheries Service (NMFS). Our final determination relative to project impacts and the need for mitigation measures is subject to review by and coordination with the NMFS.

The District Engineer has consulted the most recently available information and has determined that the project is not likely to adversely affect any Federally endangered, threatened, or proposed species or result in the destruction or adverse modification of designated or proposed critical habitat This public notice serves as a request to the U.S. Fish and Wildlife Service and the National Marine Fisheries Service for any additional information they may have on whether any listed or proposed endangered or threatened species or designated or proposed critical habitat may be present in the area which would be affected by the activity, pursuant to Section 7(c) of the Endangered Species Act of 1973 (as amended).

Pursuant to Section 106 of the National Historic Preservation Act (NHPA), this public notice also constitutes a request to Indian Tribes to notify the District Engineer of any historic properties of religious and cultural significance to them that may be affected by the proposed undertaking.

In accordance with the NHPA, the District Engineer has also consulted the latest published version of the National Register of Historic Places for the presence or absence of registered properties, or properties listed as being eligible for inclusion therein, and this worksite is not included as a registered property or property listed as being eligible for inclusion in the Register. To insure that other cultural resources that the District Engineer is not aware of are not overlooked, this public notice also serves as a request to the State Historic Preservation Office to provide any information it may have with regard to historic and cultural resources.

Any person may request, in writing, within the comment period specified in this notice, that a public hearing be held to consider this application. Requests for a public hearing shall state, with particularity, the reasons for holding a public hearing.

The decision whether to issue a permit will be based on an evaluation of the probable impact including cumulative impacts of the activity on the public interest and will include application of the guidelines promulgated by the Administrator, Environmental Protection Agency (EPA), under authority of Section 404(b) of the Clean Water Act and, as appropriate, the criteria established under authority of Section 102 of the Marine Protection, Research and Sanctuaries Act of 1972, as amended. That decision will reflect the national concern for both protection and utilization of important resources. The benefit which reasonably may be expected to accrue from the project must be balanced against its reasonably foreseeable detriments. All factors which may be relevant to the project will be considered including the cumulative effects thereof; among those are conservation, economics, aesthetics, general environmental concerns, wetlands, historic properties, fish and wildlife values, flood hazards, flood plain values, land use, navigation, shoreline erosion and accretion, recreation, water supply and conservation, water quality, energy needs, safety, food and fiber production and, in general, the needs and welfare of the people. A permit will be granted unless the District Engineer determines that it would be contrary to the public interest. In cases of conflicting property rights, the Corps of Engineers cannot undertake to adjudicate rival claims.

The Corps of Engineers is soliciting comments from the public; Federal, state, and local agencies and officials; Indian Tribes; and other interested parties in order to consider and evaluate the impacts of this activity. Any comments received will be considered by the Corps of Engineers to determine whether to issue, modify, condition or deny a permit for this project. To make this decision, comments are used to assess impacts on endangered species, historic properties, water quality, general environmental effects, and the other public interest factors listed above. Comments are used in the preparation of an Environmental Assessment and/or an Environmental Impact Statement pursuant to the National Environmental Policy Act. Comments are also used to determine the need for a public hearing and to determine the overall public interest of the activity.

If there are any questions concerning this public notice, please contact Elizabeth Jackson at 843-329-8044 or toll free at 1-866-329-8187.

Silver Cup Spring, Yeamans Hall Inc.
Berkeley County, SC
Scale 1" = 75'

By: Folk Land Management, Inc.
Robert H. Folk, III
August 30, 2006

South-facing Slope:
To be reforested in native trees & shrubs 2007-2008.

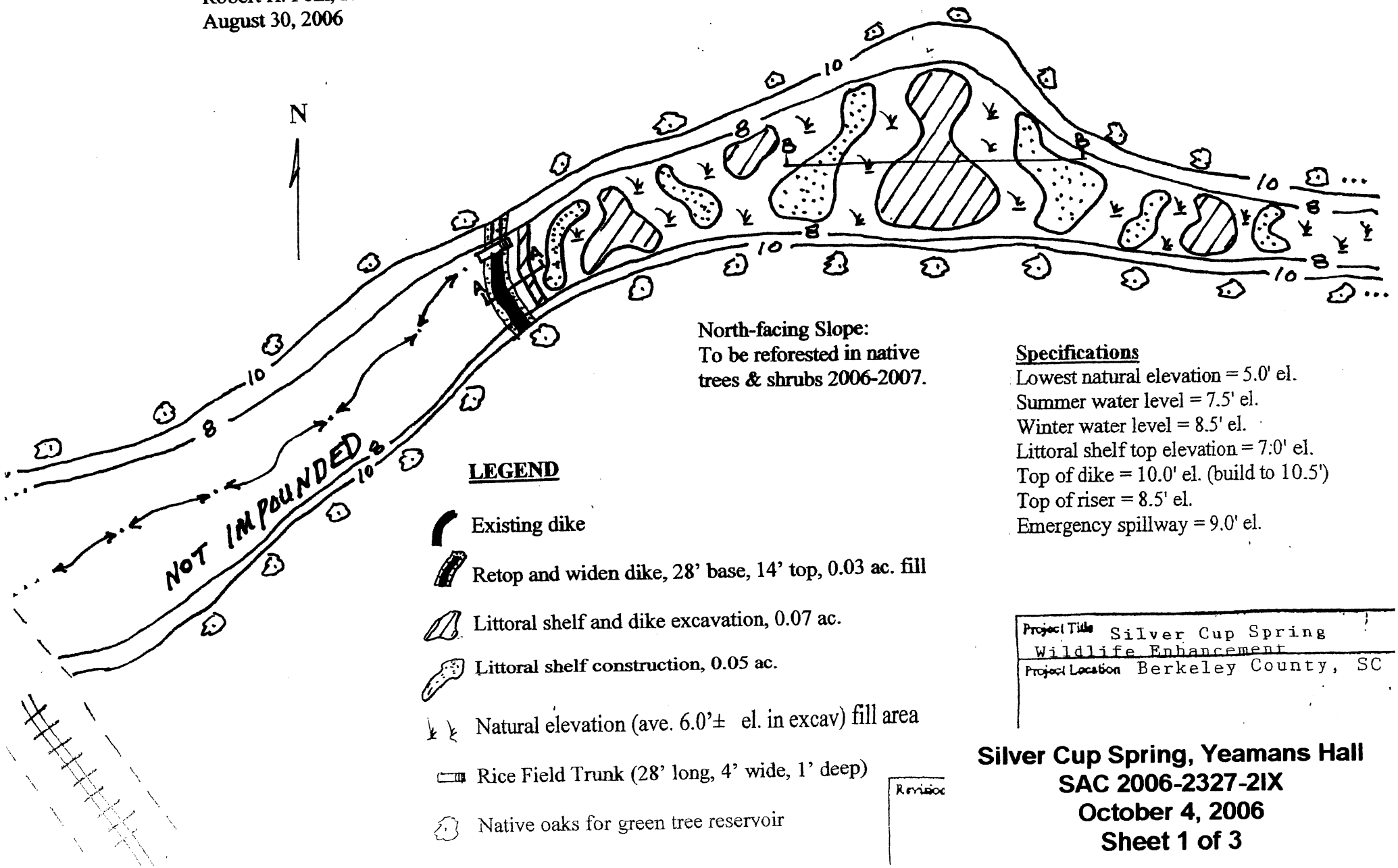

North-facing Slope:
To be reforested in native trees & shrubs 2006-2007.

Specifications
Lowest natural elevation = 5.0' el.
Summer water level = 7.5' el.
Winter water level = 8.5' el.
Littoral shelf top elevation = 7.0' el.
Top of dike = 10.0' el. (build to 10.5')
Top of riser = 8.5' el.
Emergency spillway = 9.0' el.

LEGEND

- Existing dike
- Retop and widen dike, 28' base, 14' top, 0.03 ac. fill
- Littoral shelf and dike excavation, 0.07 ac.
- Littoral shelf construction, 0.05 ac.
- Natural elevation (ave. 6.0'± el. in excav) fill area
- Rice Field Trunk (28' long, 4' wide, 1' deep)
- Native oaks for green tree reservoir

Project Title: Silver Cup Spring Wildlife Enhancement
Project Location: Berkeley County, SC

Revision

Silver Cup Spring, Yeamans Hall
SAC 2006-2327-2IX
October 4, 2006
Sheet 1 of 3

SECTION A-A
DIKE RETOPPING & WIDENING

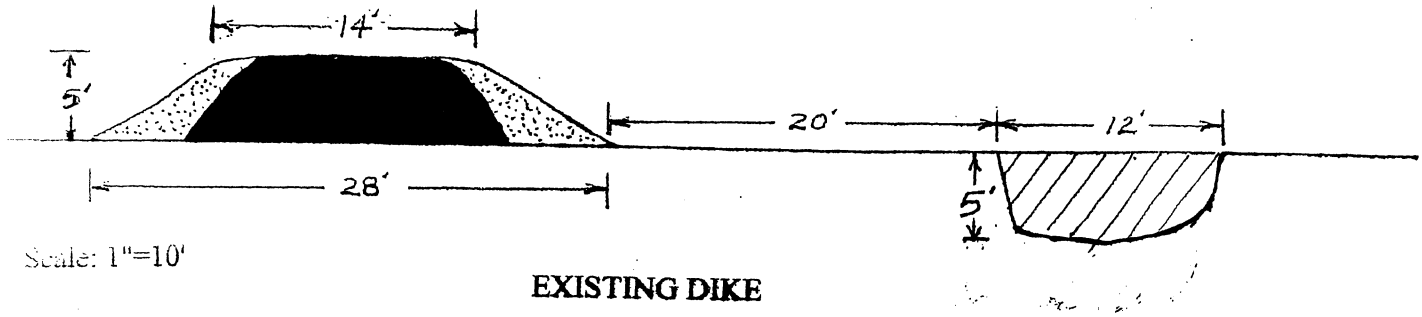

Scale: 1"=10'

EXISTING DIKE

SECTION B-B (Typ.)
LITTORAL SHELF CONSTRUCTION

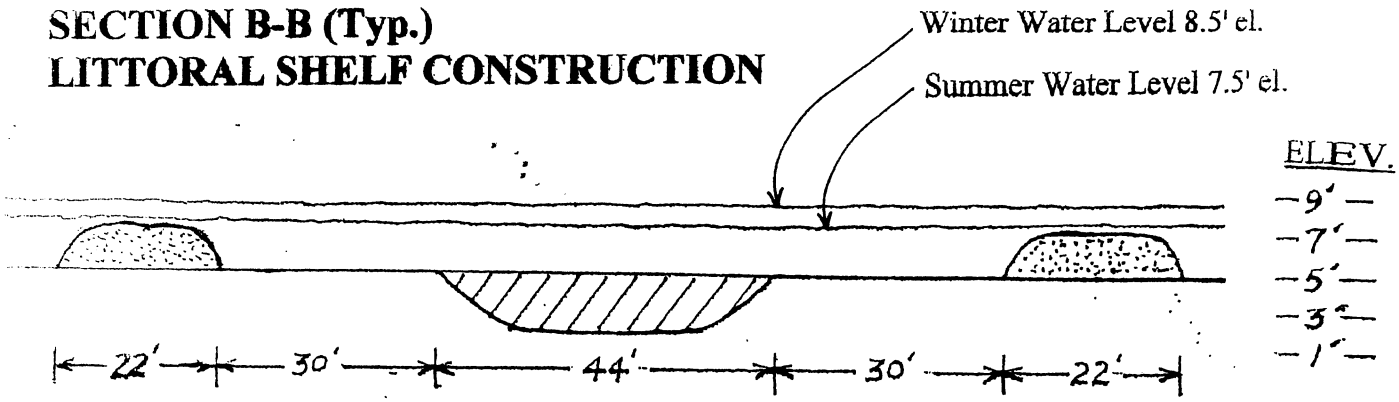

Scale: Horizontal 1"=25'
Vertical 1"=10'

LEGEND

Excavation

Fill

VICINITY MAP

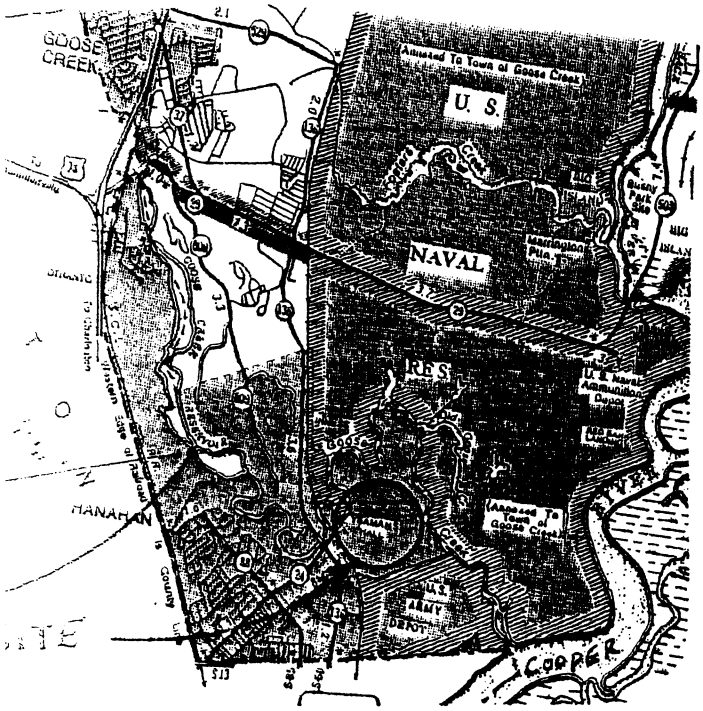

Project Title	Silver Cup Spring Wildlife Enhancement
Project Location	Berkeley County, SC
Applicant	Yeamans Hall Inc.

Revision D

Silver Cup Spring, Yeamans Hall
SAC 2006-2327-2IX
October 4, 2006
Sheet 2 of 3

FOLK LAND MANAGEMENT, INC.
WOODLAND & WILDLIFE CONSULTANTS

4964 White Hall Road
Green Pond, S.C. 29446
Office: (843) 844-2290 Fax: (843) 844-8231

YEAMANS HALL INC.
Silver Cup Spring Wildlife Enhancement

Management Plan

Once the site is reconfigured to create deep holes, littoral shelves, and interspersed natural ground elevations, the water level will be stabilized at 7.5' el. in the summer and 8.5' el. in the winter. The summer water level will flood the littoral shelves approximately 0.5' deep, thereby providing an appropriate depth for native freshwater aquatic plants and for wading bird feeding. The additional 1.0' depth in the winter will flood adjacent uplands creating a green tree reservoir.

Since the deep holes will provide a fisheries habitat that does not exist now, the impoundment will be overstocked with bluegill bream. Being overstocked and with no introduced predators such as largemouth bass, these fish are expected to be abundant and stunted; thereby, providing a plentiful food source for wading birds.

Herbicides will be required to eliminate cattails. Hopefully, preferred aquatic species (arrowhead, arrow-arum, pickerelweed, smartweed, cardinal flower, and others) will replace the cattails. If not, they will be planted.

The end result is expected to be a wetland and adjacent natural upland that will support a wide variety of native plants, birds, mammals, reptiles, amphibians, insects and fishes; that is, a rich, complex ecosystem is the goal that can be achieved with proper construction and management.

Folk Land Management, Inc.
July 26, 2006

Project Title Silver Cup Spring Wildlife Enhancement
Project Location Berkeley County, SC
Applicant Yeamans Hall Inc.

Revision

Silver Cup Spring, Yeamans Hall
SAC 2006-2327-2IX
October 4, 2006
Sheet 3 of 3