JOINT
PUBLIC NOTICE

CHARLESTON DISTRICT, CORPS OF ENGINEERS
69A Hagood Avenue
Charleston, South Carolina 29403-5107
and
THE S.C. DEPARTMENT OF HEALTH AND ENVIRONMENTAL CONTROL
Office of Ocean and Coastal Resource Management
1362 McMillan Avenue, Suite 400
Charleston, South Carolina 29405

REGULATORY DIVISION
Refer to: P/N #2004-1M-066-P

12 March 2004

Pursuant to Section 10 of the Rivers and Harbors Act of 1899 (33 U.S.C. 403), and the South Carolina Coastal Zone Management Act (48-39-10 et.seq.) an application has been submitted to the Department of the Army and the South Carolina Department of Health and Environmental Control by

P. C. BRYANT
c/o THE EARTHWORKS GROUP
11661 HIGHWAY 707
MURRELLS INLET, SOUTH CAROLINA 29576

for a permit to construct a fixed pier and floating dock in

WINYAH BAY

at a 2313 South Bay Road, Georgetown, Georgetown County, South Carolina.
(Latitude – 33.338239, Longitude – 79.290533)

In order to give all interested parties an opportunity to express their views

NOTICE

is hereby given that written statements regarding the proposed work will be received by both of the above mentioned offices until

12 O'CLOCK NOON, MONDAY, 29 MARCH 2004

from those interested in the activity and whose interests may be affected by the proposed work.

The proposed work consists of a 4' x 325' walkway leading from highland to a 16' x 25' fixed pier, which will be covered. In addition, a 10' x 20' floating dock will be attached to the pier by 4' x 16' ramp. The purpose of the work is for the applicant's private recreational use and access to Winyah Bay.

NOTE: Plans depicting the work described in this notice are available and will be provided, upon receipt of a written request, to anyone that is interested in obtaining a copy of the plans for the specific project. The request must identify the project of interest by public notice number and a self-addressed stamped envelope must also be provided for mailing the drawings to you. Your request for drawings should be addressed to the

U.S. Army Corps of Engineers
ATTN: REGULATORY DIVISION
69A Hagood Avenue
Charleston, South Carolina 29403-5107

The work shown on this application must also be certified as consistent with applicable provisions of the Coastal Zone Management Program (15 CFR 930). The District Engineer will not process this application to a conclusion until such certification is received. The applicant is hereby advised that supplemental information may be required by the State to facilitate the review. Persons wishing to comment or object to State certification must submit all comments in writing to the South Carolina Department of Health and Environmental Control at the above address within thirty (30) days of the date of this notice.

This initiates the Essential Fish Habitat (EFH) consultation requirements of the Magnuson-Stevens Fishery Conservation and Management Act. Implementation of the proposed project would impact estuarine substrates and emergent wetlands utilized by various life stages of species comprising the red drum, shrimp, and snapper-grouper management complexes. Our initial determination is that the proposed action would not have a substantial individual or cumulative adverse impact on EFH or fisheries managed by the South Atlantic Fishery Management Council and the National Marine Fisheries Service (NMFS). Our final determination relative to project impacts and the need for mitigation measures is subject to review by and coordination with the NMFS.

The District Engineer has consulted the most recently available information and has determined that the project will have no effect on any Federally endangered, threatened, or proposed species and will not result in the destruction or adverse modification of designated or proposed critical habitat. This public notice serves as a request to the U.S. Fish and Wildlife Service and the National Marine Fisheries Service for any additional information they may have on whether any listed or proposed endangered or threatened species or designated or proposed critical habitat may be present in the area which would be affected by the activity, pursuant to Section 7(c) of the Endangered Species Act of 1973 (as amended).

The District Engineer has consulted the latest published version of the National Register of Historic Places for the presence or absence of registered properties, or properties listed as being eligible for inclusion therein, and this worksite is not included as a registered property or property listed as being eligible for inclusion in the Register. Consultation of the National Register constitutes the extent of cultural resource investigations by the District Engineer, and he is otherwise unaware of the presence of such resources. Presently unknown archaeological, scientific, prehistorical, or historical data may be lost or destroyed by the work to be accomplished under the requested permit.

Any person may request, in writing, within the comment period specified in this notice, that a public hearing be held to consider this application. Requests for a public hearing shall state, with particularity, the reasons for holding a public hearing.

The decision whether to issue a permit will be based on an evaluation of the probable impact including cumulative impacts of the activity on the public interest. That decision will reflect the national concern for both protection and utilization of important resources. The benefit which reasonably may be expected to accrue from the project must be balanced against its reasonably foreseeable detriments. All factors which may be relevant to the project will be considered including the cumulative effects thereof; among those are conservation, economics, aesthetics, general environmental concerns, wetlands, historic properties, fish and wildlife values, flood hazards, flood plain values, land use, navigation, shoreline erosion and accretion, recreation, water supply and conservation, water quality, energy needs, safety, food and fiber production and, in general, the needs and welfare

of the people. A permit will be granted unless the District Engineer determines that it would be contrary to the public interest. In cases of conflicting property rights, the Corps of Engineers cannot undertake to adjudicate rival claims.

The Corps of Engineers is soliciting comments from the public; Federal, state, and local agencies and officials; Indian Tribes; and other interested parties in order to consider and evaluate the impacts of this activity. Any comments received will be considered by the Corps of Engineers to determine whether to issue, modify, condition or deny a permit for this project. To make this decision, comments are used to assess impacts on endangered species, historic properties, water quality, general environmental effects, and the other public interest factors listed above. Comments are used in the preparation of an Environmental Assessment and/or an Environmental Impact Statement pursuant to the National Environmental Policy Act. Comments are also used to determine the need for a public hearing and to determine the overall public interest of the activity.

If there are any questions concerning this public notice, please contact me at 843-329-8044 or toll free at 1-866-329-8187.

Iris B. Winn
Project Manager
Regulatory Division
U.S. Army Corps of Engineers

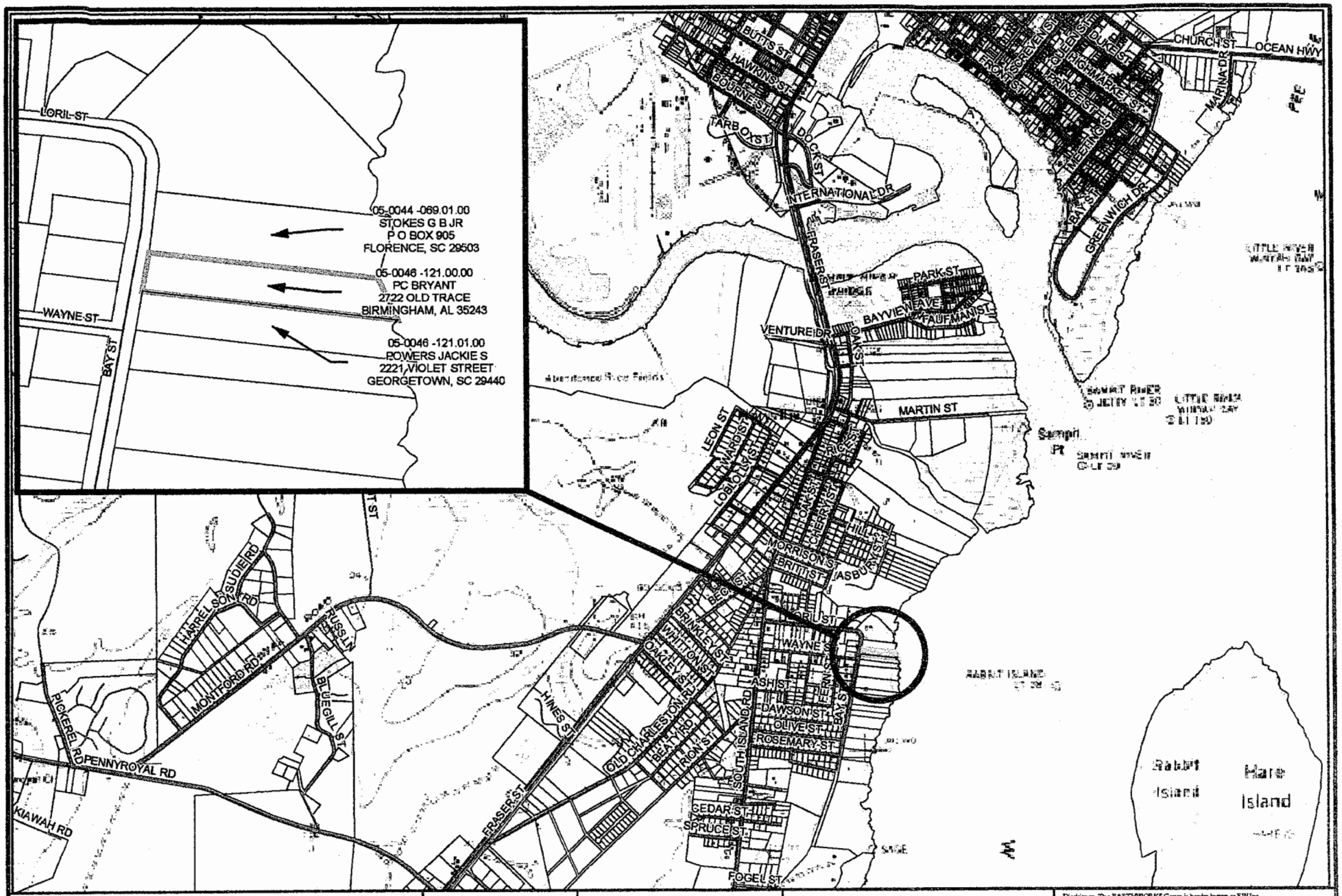

Applicant: P.C. Bryant

Project Title: Bryant Dock Application

Project Location: 2313 S Bay Rd
Georgetown, South Carolina
Georgetown South Quadrangle

N
W E
S

0 1,000 2,000 Ft

Scale 1" = 2000'

Legend

- Parcel Data
- TMS# 5-46-121
- 2000 Centerline Data

SITE / VICINITY MAP

Date: 12/5/03

Sheet 1 of 4

Application# 2004-1M-066

Disclaimer: The EARTHWORKS Group is hereby known as EW Inc.

The User agrees not to use this document, in whole or part, for any purpose or project other than the project, which is the subject of this Agreement. User agrees to waive all claims against EW Inc. resulting in any way from unauthorized changes or reuse of this document by anyone other than EW Inc. In addition, User agrees to the fullest extent permitted by law, to indemnify and hold EW Inc. harmless from any damages, liability or cost, including reasonable attorney fees and costs of defense, arising from any changes made by anyone other than EW Inc. or from any reuse of the document without the prior written consent of EW Inc. This map may not be copied in whole or in part without the express written consent from EW Inc.

The information on this Map has been compiled from various sources. The information is not guaranteed, express or implied. In certain situations, the map has been prepared without the benefit of a Threatened and Endangered Species Study, Phase I Site Assessment, Wetland Delineation, or Archeological Assessment. The results of these investigations could materially alter the map as shown.

Property Centerline Located
79°17'25.92"W by 33°20'17.66"N

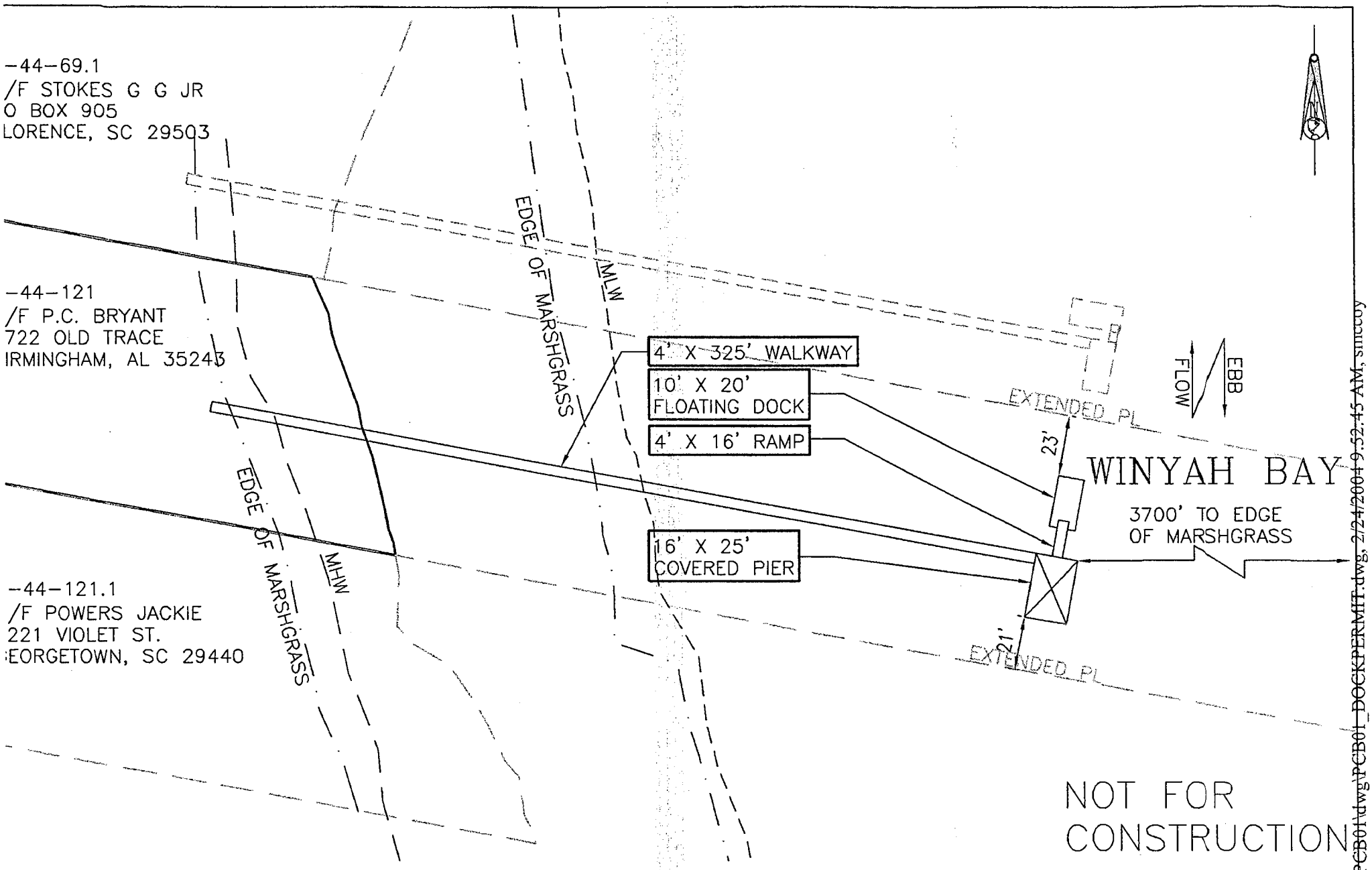

Applicant: P.C. BRYANT	Revisions: Date / Initials	Sheet Title: PLAN VIEW	
Project Title: BRYANT DOCK APPLICATION		Date: 2/9/04	Scale: 1" = 50'
Project Location: WINYAH BAY GEROGETOWN COUNTY, SOUTH CAROLINA		Application # 2004-1M-066	Sheet 2 of 4

Y:\drawings\04PTPCB01\dwg\PCB01_DOCKPERMIT.dwg, 2/24/2004 9:52:45 AM, smccoy

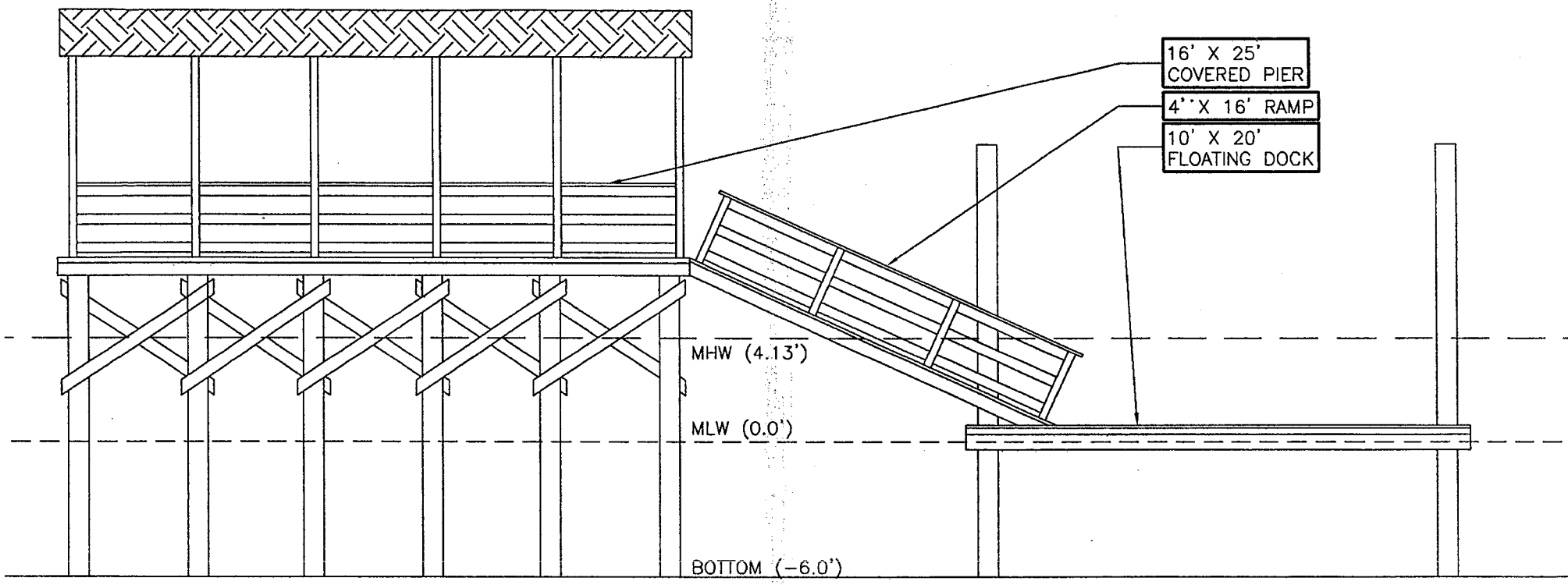

NOTES:

LOATING DOCK WILL NOT REST UPON
:OTTOM DURING MEAN LOW WATER.

:OOF WILL NOT EXCEED 12' ABOVE DECKING.

NOT FOR CONSTRUCTION

Applicant: P.C. BRYANT	Revisions		Sheet Title: FRONT ELEVATION	
	Date	Initials		
Project Title: BRYANT DOCK APPLICATION			Date: 2/9/04	Scale: 1" = 6'
Project Location: WINYAH BAY GEROGETOWN COUNTY, SOUTH CAROLINA			Application # 2004-1M-066	Sheet 3 of 4

Y:\drawings\04\PTPCB01\dwg\PCB01_DOCKPERMIT.dwg, 2/24/2004 9:52:54 AM, smccoy

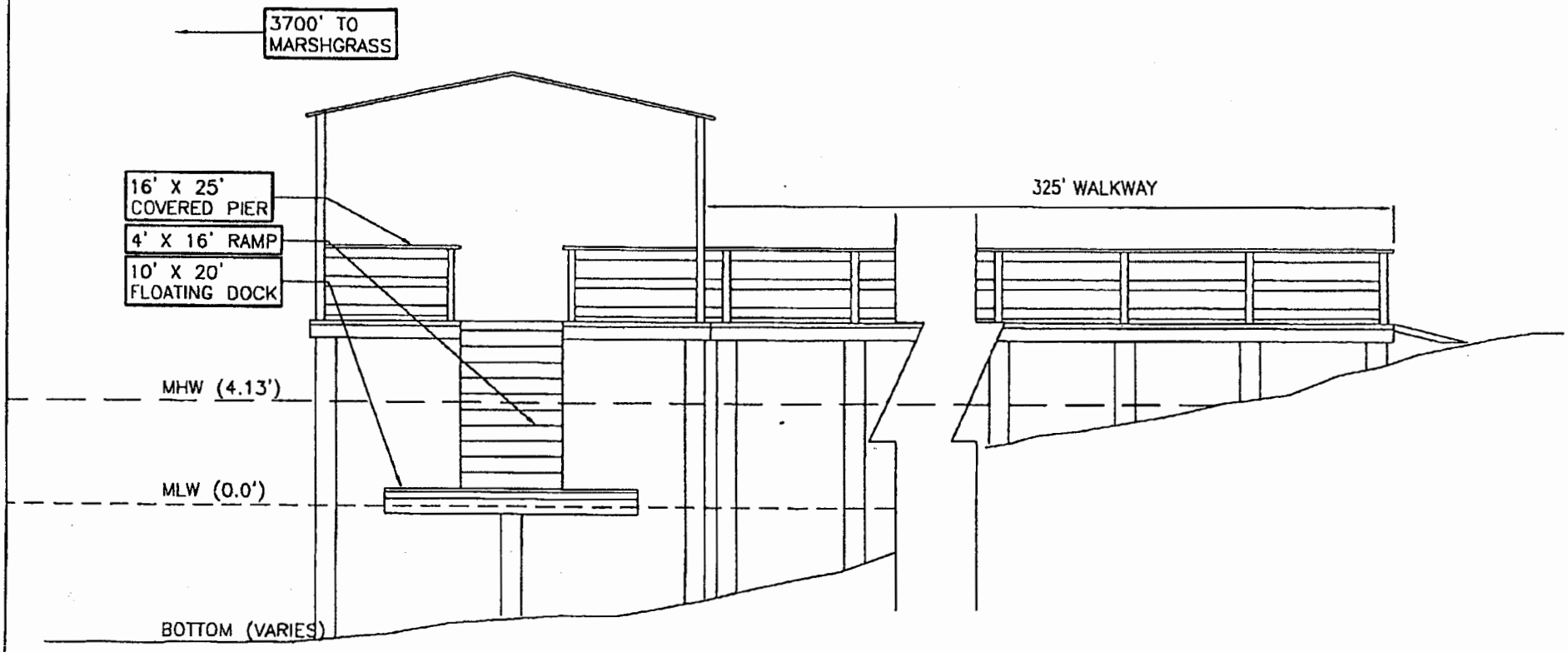

NOTES:

FLOATING DOCK WILL NOT REST UPON BOTTOM DURING MEAN LOW WATER.

ROOF WILL NOT EXCEED 12' ABOVE DECKING.

NOT FOR CONSTRUCTION

Applicant: P.C. BRYANT	Revisions		Sheet Title: SIDE ELEVATION	
	Date	Initials		
Project Title: BRYANT DOCK APPLICATION	4/9/04	SKM	Date: 2/9/04	Scale: 1" = 6'
Project Location: WINYAH BAY GEROGETOWN COUNTY, SOUTH CAROLINA			Application # 2004-1M-066	Sheet 4 of 4

Y:\drawings\04\PT\PCB01\dwg\PCB01_DOCKPERMIT.dwg, 3/9/2004 3:03:54 PM, smccoy
03/09/04 TUE 15:08 [TX/RX NO 6811]