JOINT
PUBLIC NOTICE

CHARLESTON DISTRICT, CORPS OF ENGINEERS
69A Hagood Avenue
Charleston, South Carolina 29403-5107
and
THE S.C. DEPARTMENT OF HEALTH AND ENVIRONMENTAL CONTROL
Office of Ocean and Coastal Resource Management
1362 McMillan Avenue, Suite 400
Charleston, South Carolina 29405

REGULATORY DIVISION 29 October 2004
Refer to: P/N #2004-1E-309-P

Pursuant to Section 10 of the Rivers and Harbors Act of 1899 (33 U.S.C. 403), and the South Carolina Coastal Zone Management Act (48-39-10 et.seq.), an application has been submitted to the Department of the Army and the South Carolina Department of Health and Environmental Control by

ED COX
6057 MOSSY GROVE LANE
AWENDAW, SOUTH CAROLINA 29429

for a permit to construct a joint use pier structure in the

ATLANTIC INTRACOASTAL WATERWAY (AIWW)

at a location along the common property line of 6053 and 6055 Mossy Grove Lane, Awendaw, Charleston County, South Carolina. (Latitude – 32.94184, Longitude – 79.65385)

In order to give all interested parties an opportunity to express their views

N O T I C E

is hereby given that written statements regarding the proposed work will be received by both of the above mentioned offices until

12 O'CLOCK NOON, MONDAY, 15 NOVEMBER 2004

from those interested in the activity and whose interests may be affected by the proposed work.

The proposed work consists of constructing two (2) 20' x 20' covered fixed pierheads attached to highland by a 5' wide walkway with a total length of 844'. In addition, boat lifts, each 14' x 24' and covered, will be located on the side of each fixed pierhead. Floating docks, each 10' x 20', will be located off each boat lift and attached to the boat lifts by ramps. It is understood that this work will be conducted on/or adjacent to an area subject to a prism and/or disposal easement held by the United States in perpetuity in conjunction with a Congressionally authorized project for the maintenance and improvement of the Atlantic Intracoastal Waterway. Should a permit be issued, appropriate provisions will be included to ensure the interests of the Federal Government are understood. The purpose of this work is for the private recreational use of the future lot owners of 6053 and 6055 Mossy Grove Lane.

NOTE: Plans depicting the work described in this notice are available and will be provided, upon receipt of a written request, to anyone that is interested in obtaining a copy of the plans for the specific project. The request must identify the project of interest by public notice number and a self-addressed stamped envelope must also be provided for mailing the drawings to you. Your request for drawings should be addressed to the

REGULATORY DIVISION 29 October 2004
Refer to: P/N #2004-1E-309-P
Ed Cox

U.S. Army Corps of Engineers
ATTN: REGULATORY DIVISION
69A Hagood Avenue
Charleston, South Carolina 29403-5107

The work shown on this application must also be certified as consistent with applicable provisions of the Coastal Zone Management Program (15 CFR 930). The District Engineer will not process this application to a conclusion until such certification is received. The applicant is hereby advised that supplemental information may be required by the State to facilitate the review. Persons wishing to comment or object to State certification must submit all comments in writing to the South Carolina Department of Health and Environmental Control at the above address within thirty (30) days of the date of this notice.

This initiates the Essential Fish Habitat (EFH) consultation requirements of the Magnuson-Stevens Fishery Conservation and Management Act. Implementation of the proposed project would impact estuarine substrates and emergent wetlands utilized by various life stages of species comprising the red drum, shrimp, and snapper-grouper management complexes. Our initial determination is that the proposed action would not have a substantial individual or cumulative adverse impact on EFH or fisheries managed by the South Atlantic Fishery Management Council and the National Marine Fisheries Service (NMFS). Our final determination relative to project impacts and the need for mitigation measures is subject to review by and coordination with the NMFS.

The District Engineer has consulted the most recently available information and has determined that the project will have no effect on any Federally endangered, threatened, or proposed species and will not result in the destruction or adverse modification of designated or proposed critical habitat. This public notice serves as a request to the U.S. Fish and Wildlife Service and the National Marine Fisheries Service for any additional information they may have on whether any listed or proposed endangered or threatened species or designated or proposed critical habitat may be present in the area which would be affected by the activity, pursuant to Section 7(c) of the Endangered Species Act of 1973 (as amended).

The District Engineer has consulted the latest published version of the National Register of Historic Places for the presence or absence of registered properties, or properties listed as being eligible for inclusion therein, and this worksite is not included as a registered property or property listed as being eligible for inclusion in the Register. Consultation of the National Register constitutes the extent of cultural resource investigations by the District Engineer, and he is otherwise unaware of the presence of such resources. Presently unknown archaeological, scientific, prehistorical, or historical data may be lost or destroyed by the work to be accomplished under the requested permit.

Any person may request, in writing, within the comment period specified in this notice, that a public hearing be held to consider this application. Requests for a public hearing shall state, with particularity, the reasons for holding a public hearing.

The decision whether to issue a permit will be based on an evaluation of the probable impact including cumulative impacts of the activity on the public interest. That decision will reflect the national concern for both protection and utilization of important resources. The benefit which reasonably may be expected to accrue from the project must be balanced against its reasonably foreseeable detriments. All factors which may be relevant to the project will be considered including the cumulative effects thereof; among those are conservation, economics, aesthetics, general environmental concerns, wetlands, historic properties, fish and wildlife values, flood hazards, flood plain values, land use, navigation, shoreline erosion and accretion, recreation, water supply and conservation, water quality, energy needs, safety, food and fiber production and, in general, the needs and

welfare of the people. A permit will be granted unless the District Engineer determines that it would be contrary to the public interest. In cases of conflicting property rights, the Corps of Engineers cannot undertake to adjudicate rival claims.

The Corps of Engineers is soliciting comments from the public; Federal, state, and local agencies and officials; Indian Tribes; and other interested parties in order to consider and evaluate the impacts of this activity. Any comments received will be considered by the Corps of Engineers to determine whether to issue, modify, condition or deny a permit for this project. To make this decision, comments are used to assess impacts on endangered species, historic properties, water quality, general environmental effects, and the other public interest factors listed above. Comments are used in the preparation of an Environmental Assessment and/or an Environmental Impact Statement pursuant to the National Environmental Policy Act. Comments are also used to determine the need for a public hearing and to determine the overall public interest of the activity.

If there are any questions concerning this public notice, please contact me at 843-329-8044 or toll free at 1-866-329-8187.

Jackie Easterling
Project Manager
Regulatory Division
U.S. Army Corps of Engineers

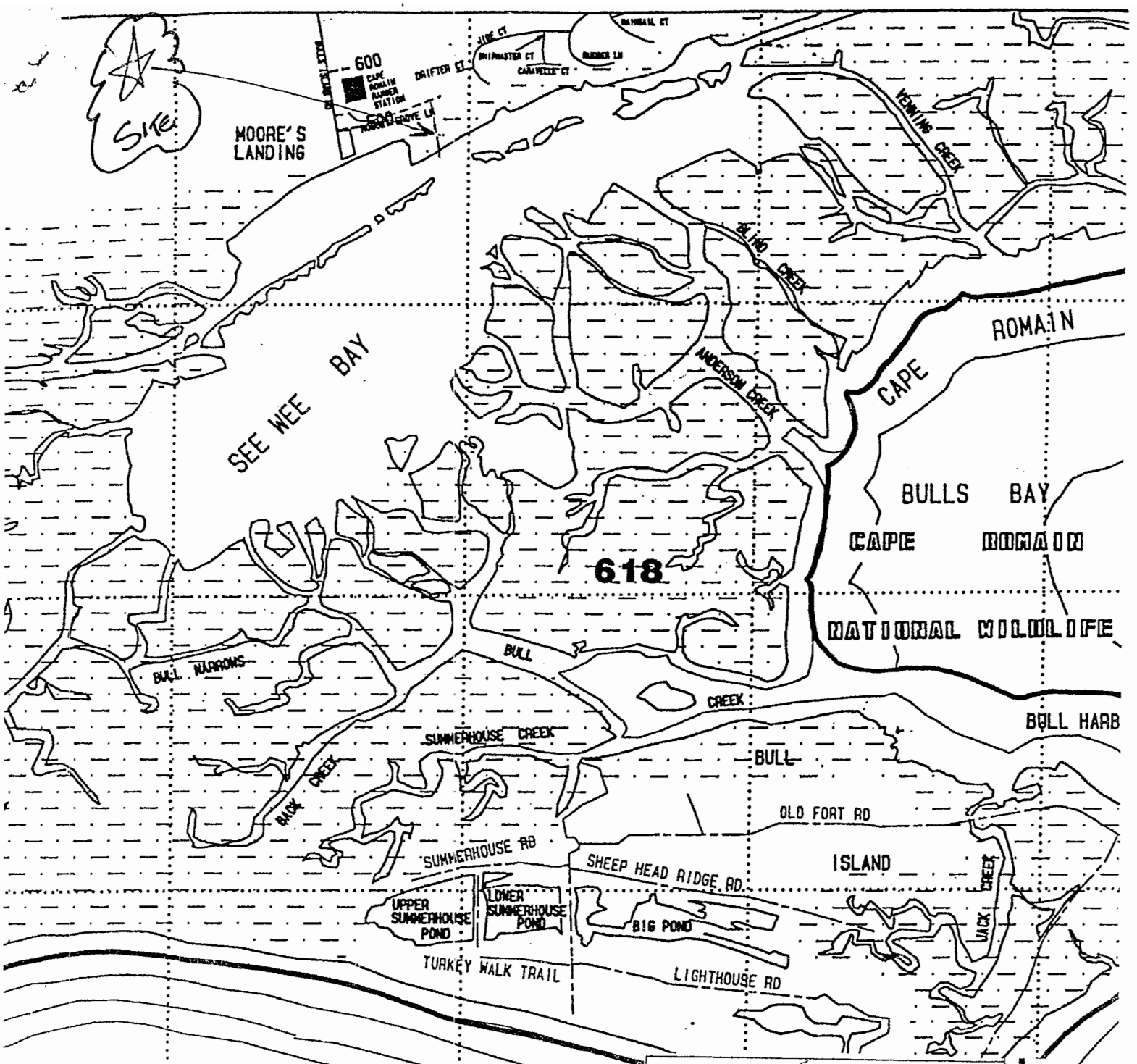

PROJECT TITLE Joint Use Dock	
PROJECT LOCATION 16053 & 16055 Mossy Grove Lane	
APPLICANT EDWARD O. COX	
AUTHORIZED AGENT Lowcountry Permitting Solutions	
DRAWING SCALE NOT TO SCALE	DATE: 8-31-04
APPLICATION # 2004-1E-309	SHEET 1 of 3

DOCK CONSISTS OF:
5'x844' OF WALKWAY
2--14'x24' COVERED BOATLIFTS
2--20'x20' COVERED PIERHEADS
& RAMPS TO 2-10'x20' FLOATS
Control- ALL STRUCTURES TO BE 1' BEHIND
80' OFFSET TO CHANNEL EDGE
: And built along the common Property Line of 6053 & 6055.

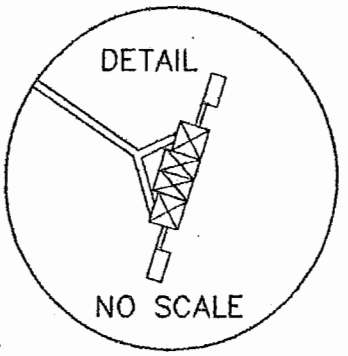

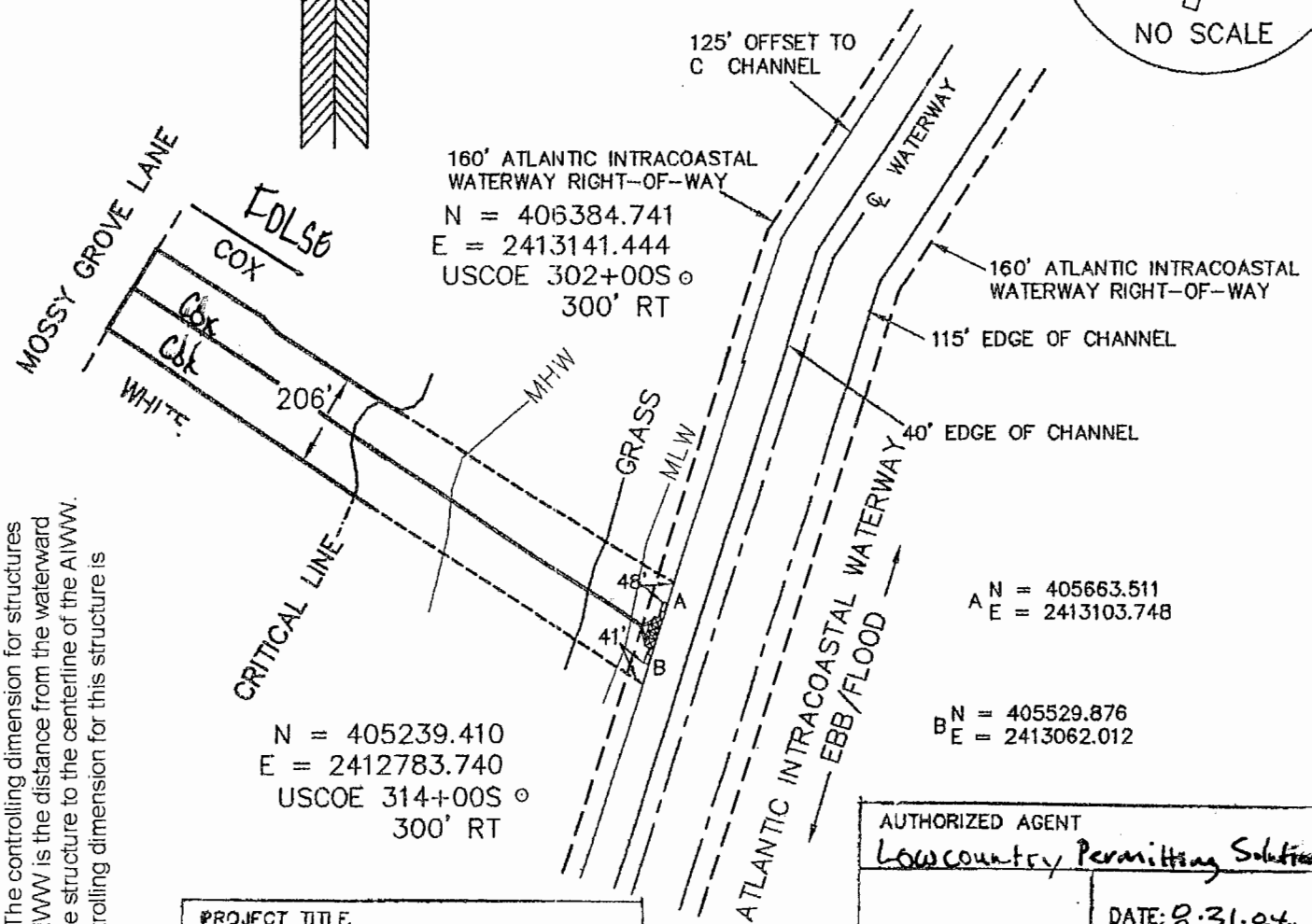

NOTE: The controlling dimension for structures on the AIWW is the distance from the waterward end of the structure to the centerline of the AIWW. The controlling dimension for this structure is 126'.

AUTHORIZED AGENT Lowcountry Permitting Solutions	
	DATE: 8.31.04
APPLICATION # 2004-1E-309	2 of 3

PROJECT TITLE Joint Use Dock
PROJECT LOCATION 6053/6055 Mossy Grove Ln
APPLICANT Ed Cox

APPLICANT: EDWARD COX
6053-6055 MOSSY GROVE LANE
TMS# 644-00-00-047 & 052
AWENDAW, CHARLESTON COUNTY
ATLANTIC INTRACOASTAL WATERWAY

JOINT PRIVATE RECREATIONAL DOCK

DATE: AUGUST 31, 2004
SCALE: 1" = 400'

400 0 400

SOUTH CAROLINA PROFESSIONAL LAND SURVEYOR REG. NO. 13171 JOHN E. WADE JR.

FILE #193-04

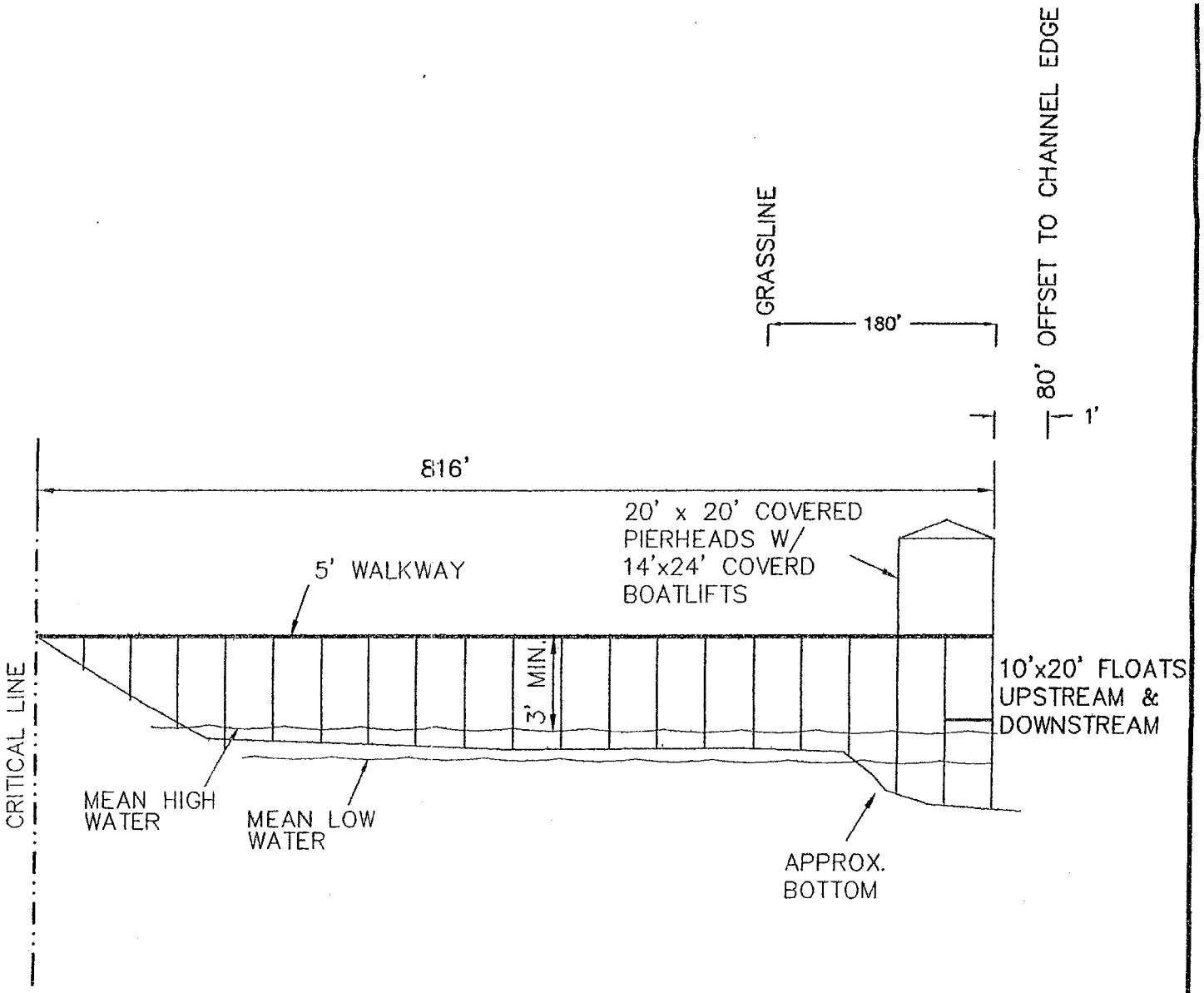

PROJECT TITLE JOINT USE DOCK	
PROJECT LOCATION 6053 / 6055 MOSSY GROVE LN	
APPLICANT ED COX	
AUTHORIZED AGENT Lowcountry Permitting Solutions	
	DATE: 8.31.04
APPLICATION # 2004-1E309	3 of 3.

APPLICANT: EDWARD COX
6053-6055 MOSSY GROVE LANE
TMS# 644-00-00-047 & 052
AWENDAW, CHARLESTON COUNTY
ATLANTIC INTRACOASTAL WATERWAY

JOINT PRIVATE RECREATIONAL DOCK

DATE: AUGUST 31, 2004

NO SCALE

FILE #193-04