# JOINT
# PUBLIC NOTICE

**CHARLESTON DISTRICT, CORPS OF ENGINEERS**
**69A Hagood Avenue**
**Charleston, South Carolina 29403-5107**
**and**
**THE S. C. DEPARTMENT OF HEALTH AND ENVIRONMENTAL CONTROL**
**Office of Environmental Quality Control**
**Water Quality Certification and Wetlands Programs Section**
**2600 Bull Street**
**Columbia, South Carolina 29201**

REGULATORY DIVISION APRIL 1, 2005
Refer to: P/N # 2005-1Z-041-W

Pursuant to Sections 401 and 404 of the Clean Water Act (33 U.S.C. 1341), and the S.C. Construction in Navigable Waters Permit Program (R. 19-450, et. seq., 1976 S.C. Code of Laws, as amended), an application has been submitted to the Department of the Army and the State of South Carolina by

**CARSON BENTON**
**706 38TH AVENUE NORTH**
**NORTH MYRTLE BEACH, SOUTH CAROLINA 29577**

for a permit to construct an impoundment in an unnamed tributary of

**BACK SWAMP**

located on the east side of Highway 41, approximately 0.3 mile east of its intersection with Elston Cook Road in Marion County, South Carolina (Latitude 34.10434, Longitude 34.10434).

In order to give all interested parties an opportunity to express their views

**NOTICE**

is hereby given that written statements regarding the proposed work will be received by both of the above mentioned offices until

**12 O'CLOCK NOON, MONDAY, MAY 1, 2005**

from those interested in the activity and whose interests may be affected by the proposed work.

The proposed work consists of constructing an approximate 2 acre greentree reservoir. In detail, the applicant proposes to construct a 300 foot long embankment, 10 feet high, with a top width of approximately 6-8 feet and a bottom width of 20 feet. Approximately 0.3-acre of wetlands will be filled for construction of the embankment and approximately 2 acres of wetlands will be flooded. The purpose of the pond is for the applicant's private use and to improve wildlife habitat.

**NOTE: Plans depicting the work described in this notice are available and will be provided, upon receipt of a written request, to anyone that is interested in obtaining a copy of the plans for the specific project. The request must identify the project of interest by public notice number and a self-addressed stamped envelope must also be provided for mailing the drawings to you. Your request for drawings should be addressed to the**

**U.S. Army Corps of Engineers**
**ATTN: REGULATORY DIVISION**
**69A Hagood Avenue**
**Charleston, South Carolina 29403-5107**

The District Engineer has concluded that the discharges associated with this project, both direct and indirect, should be reviewed by the South Carolina Department of Health and Environmental Control in accordance with provisions of Section 401 of the Clean Water Act. As such, this notice constitutes a request, on behalf of the applicant, for certification that this project will comply with applicable effluent limitations and water quality standards (Section 401 of the Clean Water Act). The District Engineer will not process this application to a conclusion until such certification is received. This activity may also require evaluation for compliance with the S. C. Construction in Navigable Waters Permit Program. State review, permitting and certification is conducted by the S. C. Department of Health and Environmental Control. The applicant is hereby advised that supplemental information may be required by the State to facilitate the review. Persons wishing to comment or object to State certification or the navigable waters permit must submit all comments in writing to the S. C. Department of Health and Environmental Control at the above address within thirty (30) days of the date of this notice.

This notice initiates the Essential Fish Habitat (EFH) consultation requirements of the Magnuson-Stevens Fishery Conservation and Management Act. Implementation of the proposed project would impact 2 acres of estuarine substrates and emergent wetlands utilized by various life stages of species comprising the red drum, shrimp, and snapper-grouper management complexes. Our initial determination is that the proposed action would not have a substantial individual or cumulative adverse impact on EFH or fisheries managed by the South Atlantic Fishery Management Council and the National Marine Fisheries Service (NMFS). Our final determination relative to project impacts and the need for mitigation measures is subject to review by and coordination with the NMFS.

The District Engineer has consulted the most recently available information and has determined that the project will have no effect on any Federally endangered, threatened, or proposed species and will not result in the destruction or adverse modification of designated or proposed critical habitat. This public notice serves as a request to the U.S. Fish and Wildlife Service and the National Marine Fisheries Service for any additional information they may have on whether any listed or proposed endangered or threatened species or designated or proposed critical habitat may be present in the area which would be affected by the activity, pursuant to Section 7(c) of the Endangered Species Act of 1973 (as amended).

The District Engineer has consulted the latest published version of the National Register of Historic Places for the presence or absence of registered properties, or properties listed as being eligible for inclusion therein, and this worksite is not included as a registered property or property listed as being eligible for inclusion in the Register. Consultation of the National Register constitutes the extent of cultural resource investigations by the District Engineer, and he is otherwise unaware of the presence of such resources. Presently unknown archaeological, scientific, prehistorical, or historical data may be lost or destroyed by the work to be accomplished under the requested permit.

Any person may request, in writing, within the comment period specified in this notice, that a public hearing be held to consider this application. Requests for a public hearing shall state, with particularity, the reasons for holding a public hearing.

The decision whether to issue a permit will be based on an evaluation of the probable impact including cumulative impacts of the activity on the public interest and will include application of the guidelines promulgated by the Administrator, Environmental Protection Agency (EPA), under authority of Section 404(b) of the Clean

Water Act and, as appropriate, the criteria established under authority of Section 102 of the Marine Protection, Research and Sanctuaries Act of 1972, as amended. That decision will reflect the national concern for both protection and utilization of important resources. The benefit which reasonably may be expected to accrue from the project must be balanced against its reasonably foreseeable detriments. All factors which may be relevant to the project will be considered including the cumulative effects thereof; among those are conservation, economics, aesthetics, general environmental concerns, wetlands, historic properties, fish and wildlife values, flood hazards, flood plain values, land use, navigation, shoreline erosion and accretion, recreation, water supply and conservation, water quality, energy needs, safety, food and fiber production and, in general, the needs and welfare of the people. A permit will be granted unless the District Engineer determines that it would be contrary to the public interest. In cases of conflicting property rights, the Corps of Engineers cannot undertake to adjudicate rival claims.

The Corps of Engineers is soliciting comments from the public; Federal, state, and local agencies and officials; Indian Tribes; and other interested parties in order to consider and evaluate the impacts of this activity. Any comments received will be considered by the Corps of Engineers to determine whether to issue, modify, condition or deny a permit for this project. To make this decision, comments are used to assess impacts on endangered species, historic properties, water quality, general environmental effects, and the other public interest factors listed above. Comments are used in the preparation of an Environmental Assessment and/or an Environmental Impact Statement pursuant to the National Environmental Policy Act. Comments are also used to determine the need for a public hearing and to determine the overall public interest of the activity.

If there are any questions concerning this public notice, please contact me at 843-329-8044 or toll free at 1-866-329-8187.

Elizabeth Jackson
Project Manager
Regulatory Division
U.S. Army Corps of Engineers

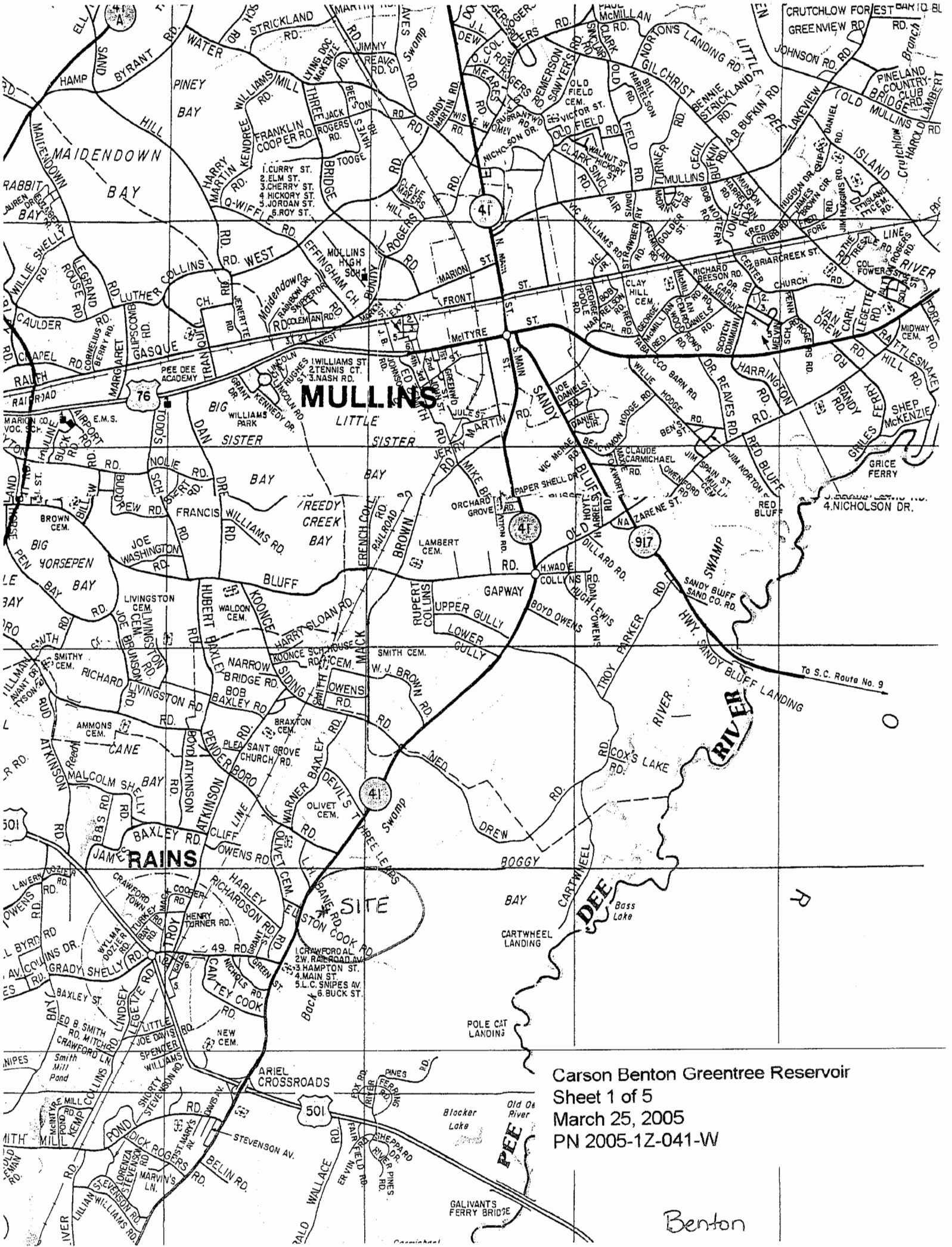
MULLINS
RAINS
SITE
MAIDENDOWN BAY
PINEY BAY
LITTLE SISTER BAY
BIG SISTER BAY
REEDY CREEK BAY
BIG HORSEPEN BAY
CANE BAY
BOGGY BAY
PEE DEE RIVER
SWAMP
CARTWHEEL LANDING
POLE CAT LANDING
GALIVANTS FERRY BRIDGE
ARIEL CROSSROADS
To S.C. Route No. 9
Bass Lake
Blocker Lake
Old Dee River
Smith Mill Pond
Carson Benton Greentree Reservoir
Sheet 1 of 5
March 25, 2005
PN 2005-1Z-041-W
Benton

# Site Map

**Carson Benton**

**Date: 01/13/2005**

## Legend

Carson Benton Greentree Reservoir
Sheet 2 of 5
March 25, 2005
PN 2005-1Z-041-W

Planned Land Units
Marionrds.shp

USDA

1000 0 1000 2000 Feet

N

# Plan Map

**Carson Benton**

**Date: 01/13/2005**

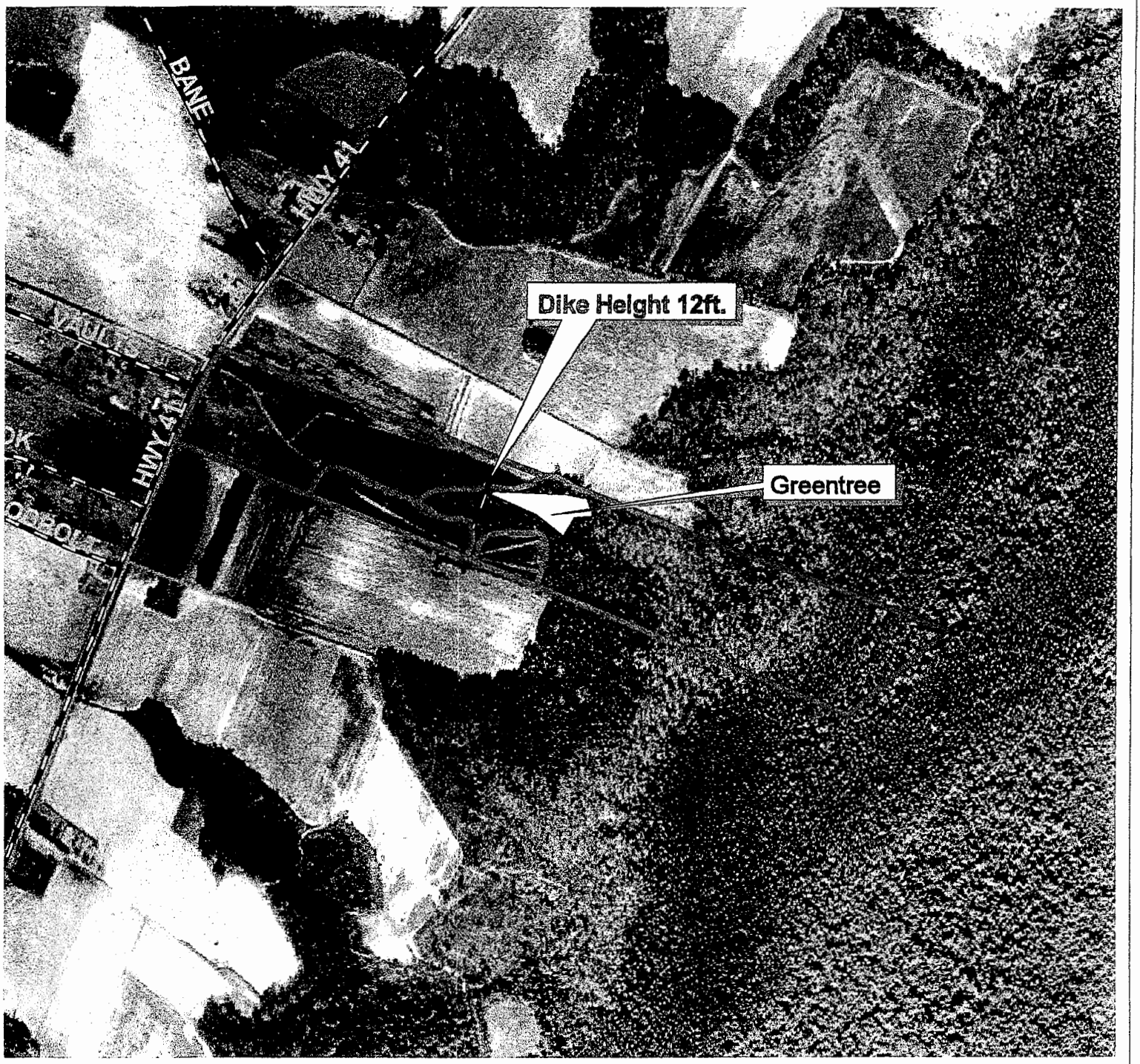


## Legend

- Pond dam.shp
- GreenTree .shp
- Planned Land Units
- Marionrds.shp

Carson Benton Greentree Reservoir
Sheet 3 of 5
March 25, 2005
PN 2005-1Z-041-W

N

USDA

1000 0 1000 2000 Feet

# Benton – Dike Design

***Front View***

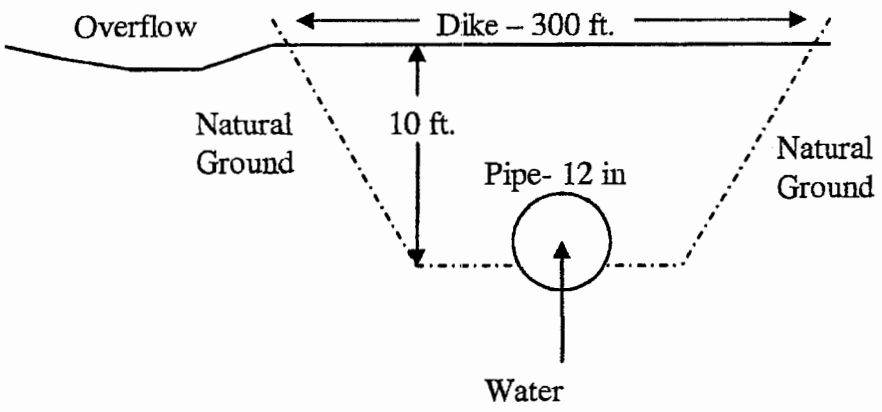


***Back View***

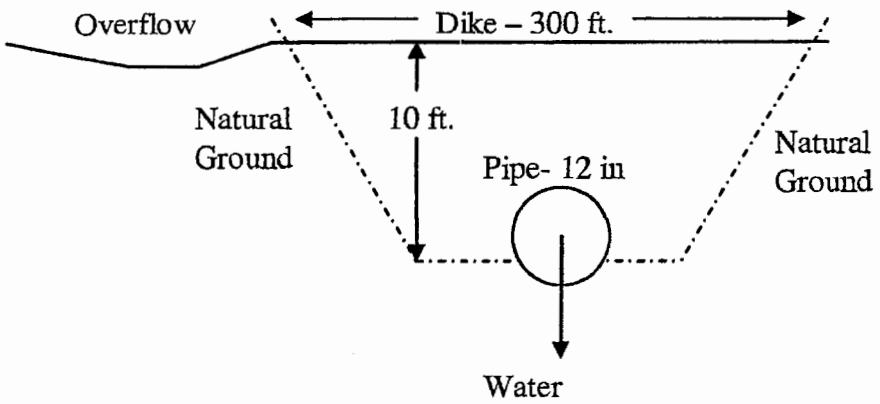


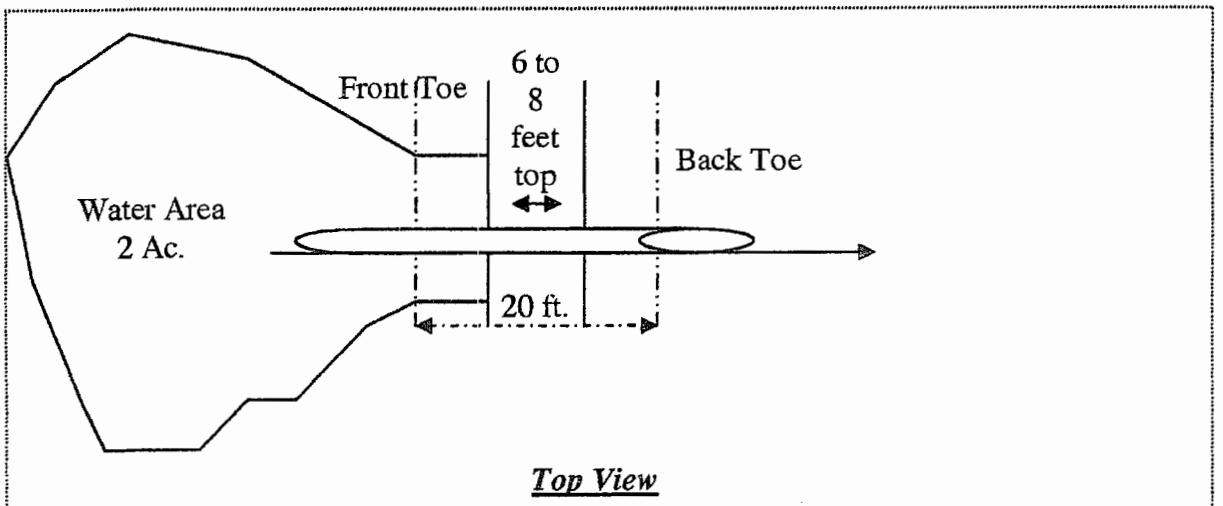


***Top View***

Carson Benton Greentree Reservoir
Sheet 4 of 5
March 25, 2005
PN 2005-1Z-041-W

# Topo Map - Centenary

**Carson Benton**

**Date: 01/13/2005**

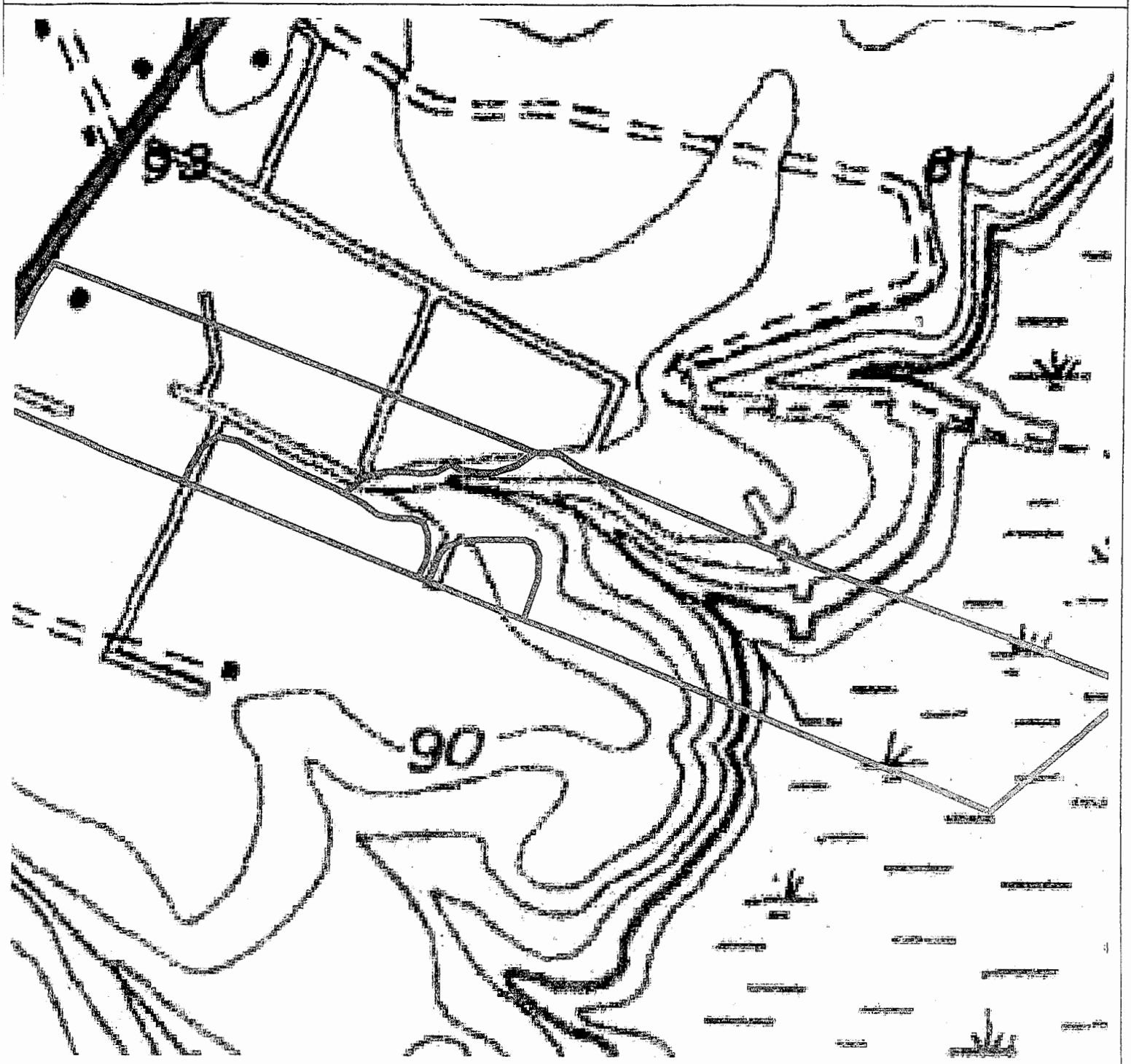


## Legend

Carson Benton Greentree Reservoir
Sheet 5 of 5
March 25, 2005
PN 2005-1Z-041-W

N

Planned Land Units

USDA

600 0 600 1200 Feet