JOINT
PUBLIC NOTICE

CHARLESTON DISTRICT, CORPS OF ENGINEERS
1949 Industrial Park Road, Room 110
Conway, South Carolina 29526
and
THE S.C. DEPARTMENT OF HEALTH AND ENVIRONMENTAL CONTROL
Office of Environmental Quality Control
Water Quality Certification and Wetlands Programs Section
2600 Bull Street
Columbia, South Carolina 29201

REGULATORY DIVISION 21 APRIL 2006
Refer to: P/N #2006-638-7IE-C

Pursuant to Section 10 of the Rivers and Harbors Act of 1899 (33 U.S.C. 403), the South Carolina Coastal Zone Management Act (48-39-10 et.seq.) and the S.C. Construction in Navigable Waters Permit Program (R. 19-450, et. seq., 1976 S.C. Code of Laws, as amended), an application has been submitted to the Department of the Army and the S.C. Department of Health and Environmental Control by

KELLI S. BAIR
c/o BEAM, SHANNON & ASSOCIATES
P.O. BOX 11863
COLUMBIA, SOUTH CAROLINA 29211-1863

for a permit to construct a dock structure in the

ATLANTIC INTRACOASTAL WATERWAY

at a location described as Lot #4 off Smith Boulevard, in the Socastee Township, Horry County, South Carolina (Latitude 33.69940, Longitude 78.97973).

In order to give all interested parties an opportunity to express their views

NOTICE

is hereby given that written statements regarding the proposed work will be received by both of the above mentioned offices until

12 O'CLOCK NOON, MONDAY, 22 MAY 2006

from those interested in the activity and whose interests may be affected by the proposed work.

The proposed work consists of constructing a 10' x 10' fixed pierhead attached to high ground by a 4' X 50' walkway. Extending from the pierhead towards the channel, a 10' X 20' floating dock will be attached to the pierhead by a 3' X 15' adjusting ramp. It is understood that this work is to be conducted on/or adjacent to an area subject to a prism and/or disposal area held by the United States. If a permit is issued, appropriate provisions will be included to ensure the interests of the Federal Government are understood. The purpose of the proposed work, as stated by the applicant, is for the owner's private, recreational use.

NOTE: Plans depicting the work described in this notice are available and will be provided, upon receipt of a written request, to anyone that is interested in obtaining a copy of the plans for the specific project. The request must identify the project of interest by public notice number and a self-addressed stamped envelope must also be

provided for mailing the drawings to you. Your request for drawings should be addressed to the

U.S. Army Corps of Engineers
ATTN: REGULATORY DIVISION
1949 Industrial Park Road, Room 110
Conway, South Carolina 29526

The work shown on this application must be certified as consistent with applicable provisions of the Coastal Zone Management Program (15 CFR 930). The District Engineer will not process this application to a conclusion until such certification is received. This activity may also require evaluation for compliance with the S.C. Construction in Navigable Waters Permit Program. State review, permitting and certification is conducted by the S.C. Department of Health and Environmental Control. The applicant is hereby advised that supplemental information may be required by the State to facilitate the review. Persons wishing to comment or object to State certification or the navigable waters permit must submit all comments in writing to the S.C. Department of Health and Environmental Control at the above address within thirty (30) days of the date of this notice.

This notice initiates the Essential Fish Habitat (EFH) consultation requirements of the Magnuson-Stevens Fishery Conservation and Management Act. Implementation of the proposed project would impact acres of estuarine substrates and emergent wetlands utilized by various life stages of species comprising the red drum, shrimp, and snapper-grouper management complexes. Our initial determination is that the proposed action would not have a substantial individual or cumulative adverse impact on EFH or fisheries managed by the South Atlantic Fishery Management Council and the National Marine Fisheries Service (NMFS). Our final determination relative to project impacts and the need for mitigation measures is subject to review by and coordination with the NMFS.

The District Engineer has consulted the most recently available information and has determined that the project will have no effect on any Federally endangered, threatened, or proposed species and will not result in the destruction or adverse modification of designated or proposed critical habitat. This public notice serves as a request to the U.S. Fish and Wildlife Service and the National Marine Fisheries Service for any additional information they may have on whether any listed or proposed endangered or threatened species or designated or proposed critical habitat may be present in the area which would be affected by the activity, pursuant to Section 7(c) of the Endangered Species Act of 1973 (as amended).

Pursuant to Section 106 of the National Historic Preservation Act (NHPA), this public notice also constitutes a request to Indian Tribes to notify the District Engineer of any historic properties of religious and cultural significance to them that may be affected by the proposed undertaking.

In accordance with the NHPA, the District Engineer has also consulted the latest published version of the National Register of Historic Places for the presence or absence of registered properties, or properties listed as being eligible for inclusion therein, and this worksite is not included as a registered property or property listed as being eligible for inclusion in the Register. To insure that other cultural resources that the District Engineer is not aware of are not overlooked, this public notice also serves as a request to the State Historic Preservation Office to provide any information it may have with regard to historic and cultural resources.

Any person may request, in writing, within the comment period specified in this notice, that a public hearing be held to consider this application. Requests for a public hearing shall state, with particularity, the reasons for holding a public hearing.

The decision whether to issue a permit will be based on an evaluation of the probable impact including cumulative impacts of the activity on the public interest. That decision will reflect the national concern for both protection and utilization of important resources. The benefit which reasonably may be expected to accrue from

the project must be balanced against its reasonably foreseeable detriments. All factors which may be relevant to the project will be considered including the cumulative effects thereof; among those are conservation, economics, aesthetics, general environmental concerns, wetlands, historic properties, fish and wildlife values, flood hazards, flood plain values, land use, navigation, shoreline erosion and accretion, recreation, water supply and conservation, water quality, energy needs, safety, food and fiber production and, in general, the needs and welfare of the people. A permit will be granted unless the District Engineer determines that it would be contrary to the public interest. In cases of conflicting property rights, the Corps of Engineers cannot undertake to adjudicate rival claims.

The Corps of Engineers is soliciting comments from the public; Federal, state, and local agencies and officials; Indian Tribes; and other interested parties in order to consider and evaluate the impacts of this activity. Any comments received will be considered by the Corps of Engineers to determine whether to issue, modify, condition or deny a permit for this project. To make this decision, comments are used to assess impacts on endangered species, historic properties, water quality, general environmental effects, and the other public interest factors listed above. Comments are used in the preparation of an Environmental Assessment and/or an Environmental Impact Statement pursuant to the National Environmental Policy Act. Comments are also used to determine the need for a public hearing and to determine the overall public interest of the activity.

If there are any questions concerning this public notice, please contact me at 843-365-4239.

Tommy Fennel
Project Manager
Regulatory Division
U.S. Army Corps of Engineers

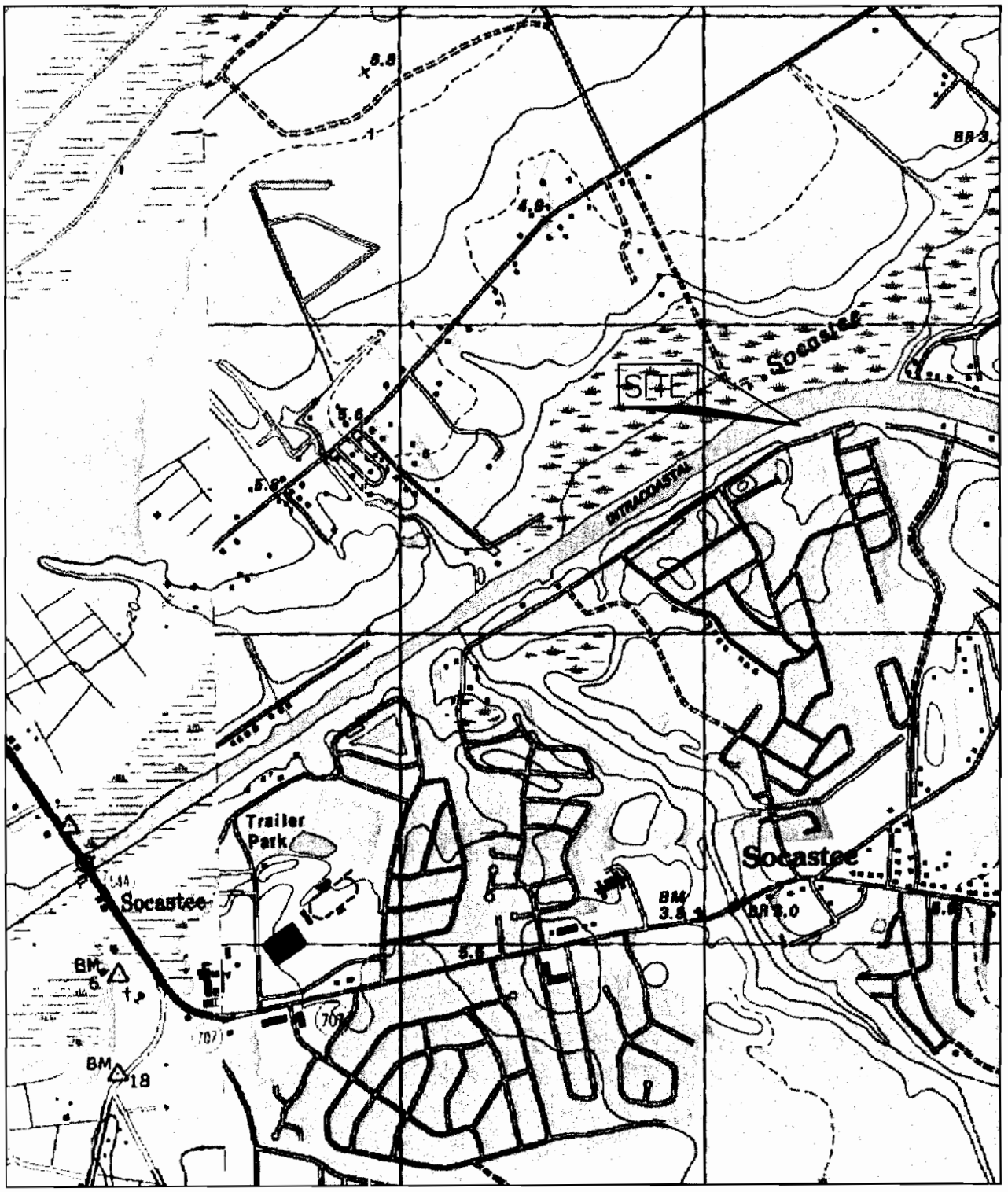

LOCATION MAP

APPLICANT: Kelli Bair ACTIVITY: Construct Walkway, Pier Head & Float P/N#2006-638-IIE-C	LOCATION: Socastee INTRACOASTAL WATERWAY COUNTY: Horry DATE: 2/28/06	SHEET 1 OF 5

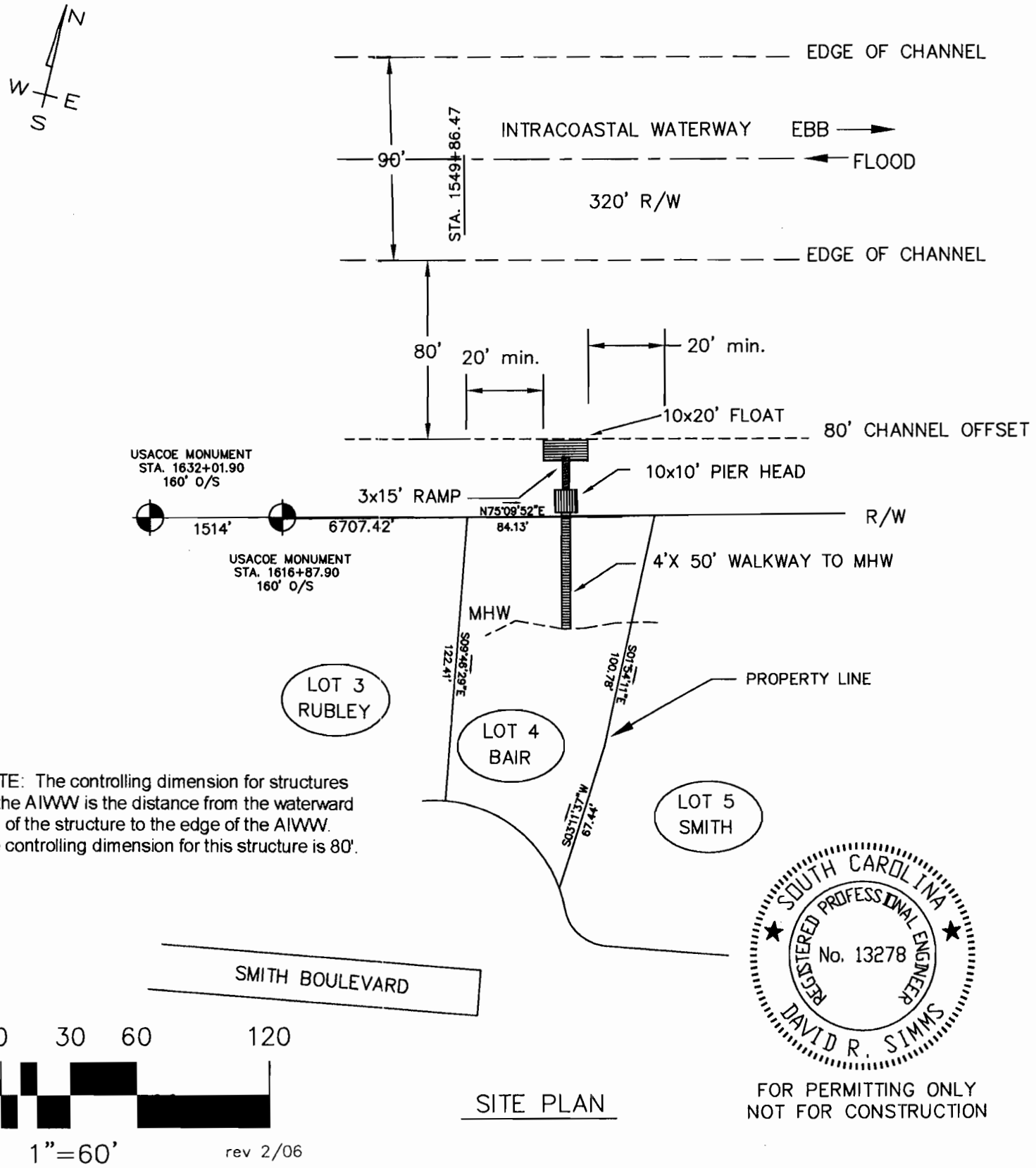

NOTE: The controlling dimension for structures on the AIWW is the distance from the waterward end of the structure to the edge of the AIWW. The controlling dimension for this structure is 80'.

SITE PLAN

FOR PERMITTING ONLY
NOT FOR CONSTRUCTION

APPLICANT: Kelli Bair ACTIVITY: Construct Walkway, Pier Head & Float P/N#2006-638-7IE-C	LOCATION: Socastee INTRACOASTAL WATERWAY COUNTY: Horry DATE: 2/28/06	SHEET 2 OF 5

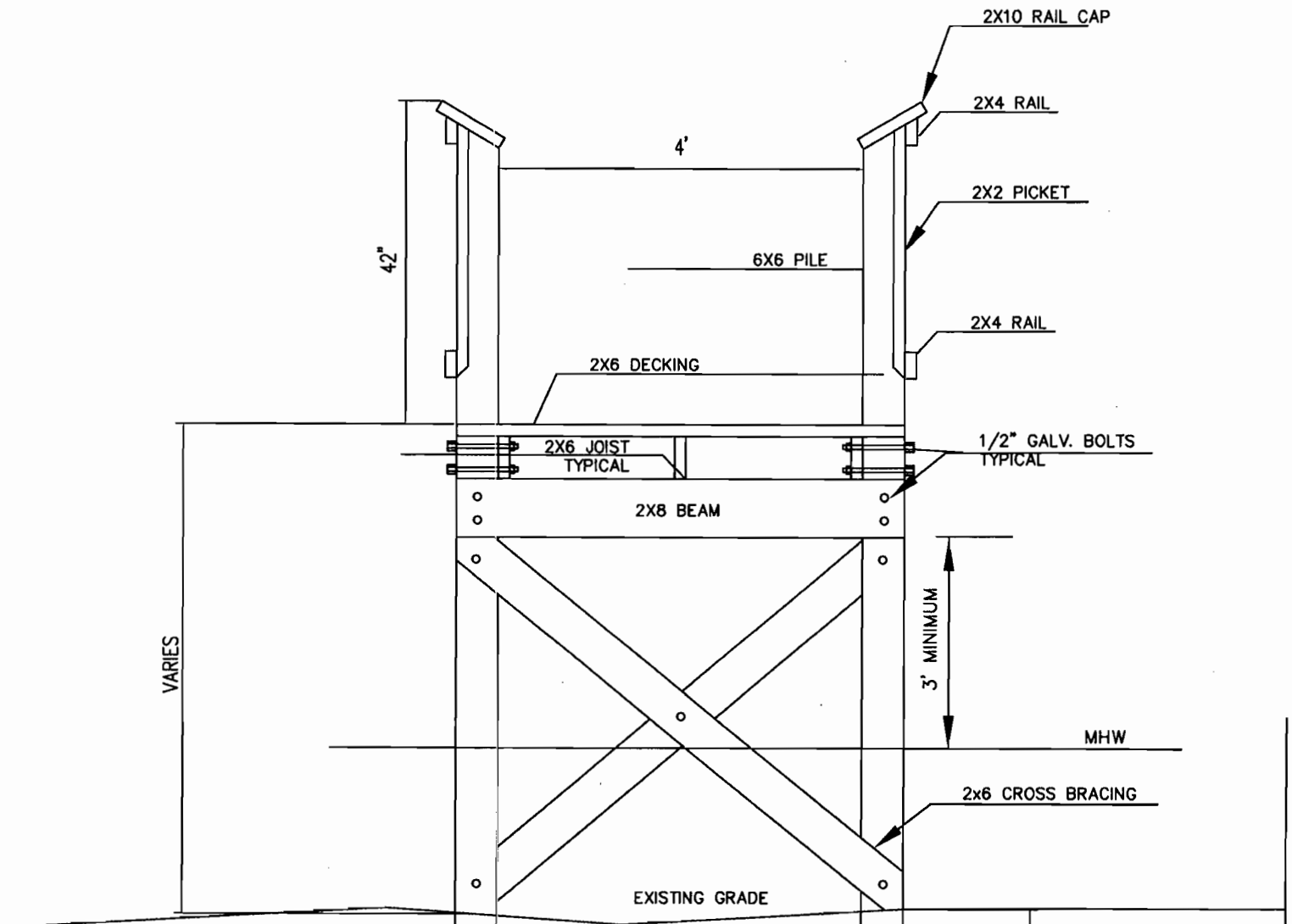

WALKWAY
CROSS SECTION

NOT TO SCALE

SOUTH CAROLINA
REGISTERED PROFESSIONAL ENGINEER
No. 13278
DAVID R. SIMMS

FOR PERMITTING ONLY
NOT FOR CONSTRUCTION

APPLICANT: Keiil Bair ACTIVITY: Construct Walkway, Pier Head and Float P/N# 2006-638-7IE-C	LOCATION: Socastee Township COUNTY: HORRY DATE: 2/28/06	SHEET 3 of 5

SOUTH CAROLINA
REGISTERED PROFESSIONAL ENGINEER
No. 13278
DAVID R. SIMMS

FOR PERMITTING ONLY
NOT FOR CONSTRUCTION

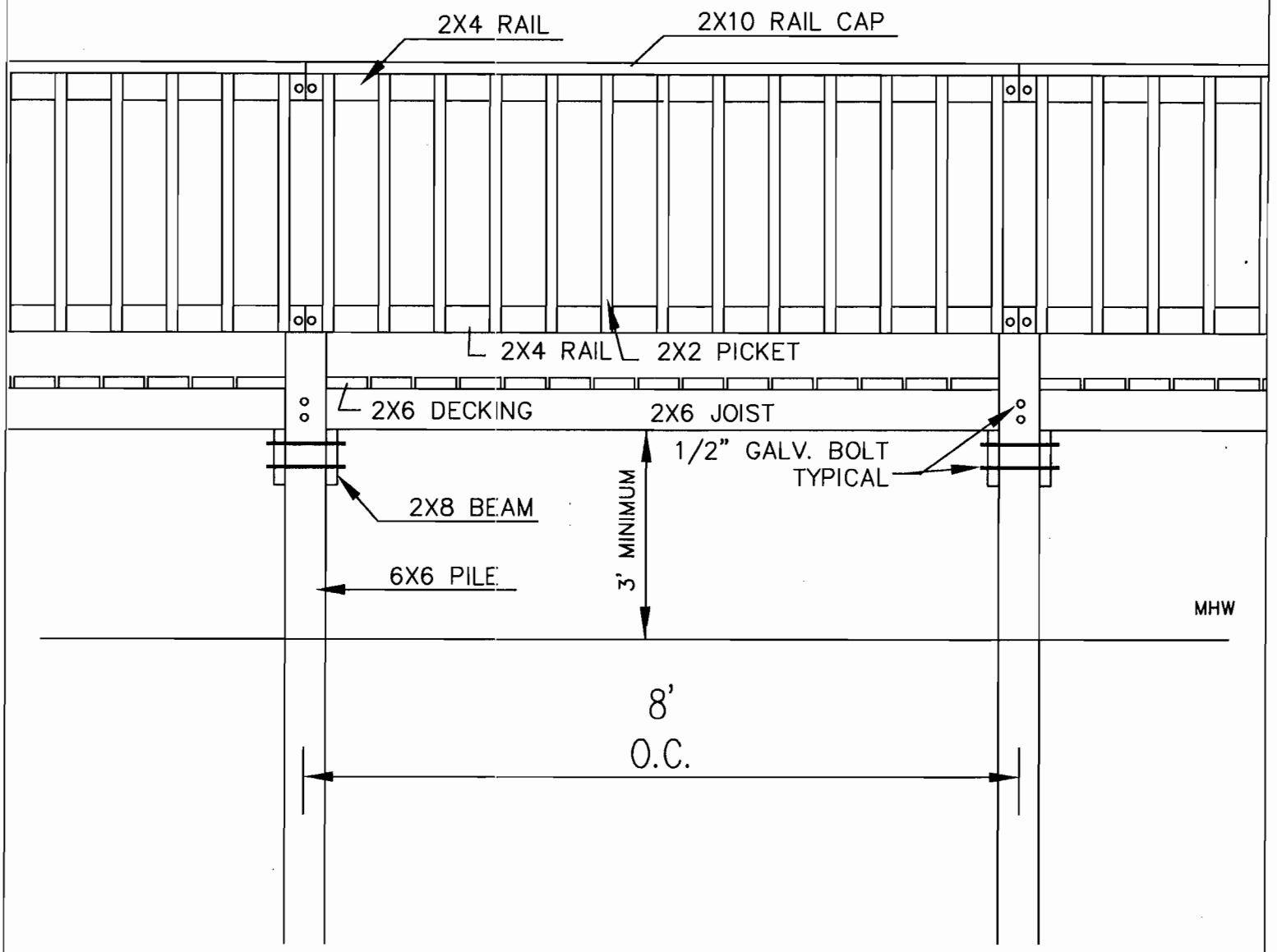

WALKWAY / PIER ELEVATION

NOT TO SCALE

APPLICANT: Kelli Bair ACTIVITY: Construct Walkway, Pier Head and Float P/N# 2006-638-7IE-C	LOCATION: Socastee Township COUNTY: HORRY DATE: 2/28/06	SHEET 4 of 5

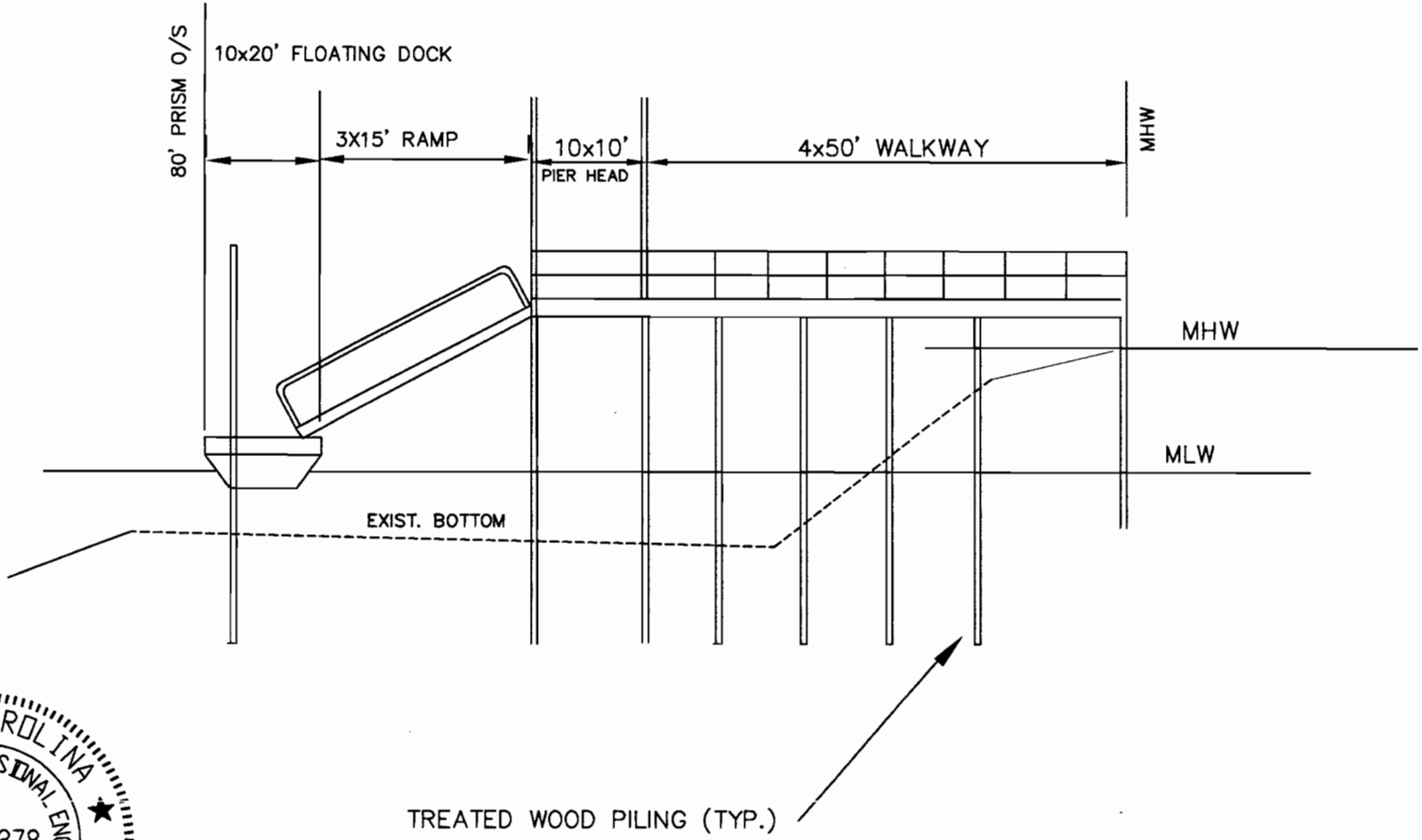

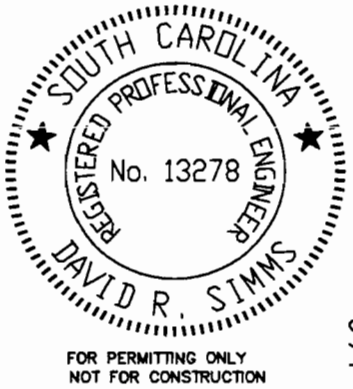

FOR PERMITTING ONLY
NOT FOR CONSTRUCTION

SECTION – FLOATING DOCK/RAMP/PIER HEAD/WALKWAY

NTS

APPLICANT: Kelli Bair	LOCATION: Socastee Township	
ACTIVITY: Construct Walkway, Pier Head and Float	COUNTY: Horry	
P/N# 2006-638-7IE-C	DATE: 2/28/06	SHEET 5 of 5